SONY

Interchangeable Lens Digital Camera

ILCE-7S

How to Use

Before Use

Names of parts

- Checking the camera and the supplied items [1]
- Identifying parts (Front side) [2]
- Identifying parts (Rear side) [3]
- Identifying parts (Top side/Side view) [4]
- Identifying parts (Bottom view) [5]

Icons and indicators

- List of icons on the screen [6]

Using the strap

- Using the shoulder strap [7]

Attaching the eyepiece cup

- Attaching the eyepiece cup [8]

Adjusting the viewfinder

- Adjusting the viewfinder (diopter-adjustment) [9]

In-Camera guide

- About the [In-Camera Guide] [10]

Preparing the camera

Charging the battery pack

- Charging the battery pack using a charger [11]
- Charging the battery pack while it is inserted in the camera [12]
- Charging by connecting to a computer [13]
- Inserting the battery pack into the camera [14]
- Battery life and the number of images that can be recorded/played back using a battery pack [15]
- Supplying power using a wall outlet (wall socket) [16]
- Removing the battery pack [17]

Inserting a memory card (sold separately)

- Inserting a memory card [18]
- Removing the memory card [19]

Attaching a lens

- Attaching a lens [20]
- Removing the lens [21]
- Attaching the lens hood [22]
- Notes on changing the lens [23]

Setting the date and time

- Setting the date and time [24]

Confirming the operation method

Confirming the operation method

- Using the control wheel [25]

- Using MENU items [26]
- Using the Fn (Function) button [27]
- Using the "Quick Navi" [28]

Shooting

Shooting still images/movies

- Shooting still images [29]
- Shooting movies [30]

Selecting a shooting mode

- List of mode dial functions [31]
- Intelligent Auto [32]
- Superior Auto [33]
- About Scene Recognition [34]
- The advantages of automatic shooting [35]
- Program Auto [36]
- Sweep Panorama [37]
- Scene Selection [38]
- Shutter Priority [39]
- Aperture Priority [40]
- Manual Exposure [41]
- BULB [42]
- Memory recall [43]
- Movie [44]

Using shooting functions

Using the zoom

- Zoom [45]
- The zoom features available with this product [46]
- Zoom Setting [47]

- About zoom scale [48]
- Zoom Ring Rotate [49]

Using the flash

- Using flash (sold separately) [50]
- Flash Mode [51]
- Flash Comp. [52]
- FEL Lock [53]

Selecting a screen display mode

- Switching the screen display (Shooting) [54]
- DISP Button (Finder) [55]
- DISP Button (Monitor) [56]

Selecting still image size/image quality

- Image Size (still image) [57]
- Aspect Ratio (still image) [58]
- Quality (still image) [59]
- Panorama: Size [60]
- Panorama: Direction [61]

Adjusting the focus

- Focus Mode [62]
- Focus Area [63]
- Center Lock-on AF [64]
- Focus-lock [65]
- Manual Focus [66]
- Direct manual focus (DMF) [67]
- MF Assist (still image) [68]
- Focus Magnifier [69]
- Focus Magnif. Time [70]
- Peaking Level [71]

- Peaking Color [72]
- Pre-AF (still image) [73]
- Eye-Start AF (still image) [74]
- AF/MF control [75]
- AF Illuminator (still image) [76]
- AF Micro Adj. [77]
- Focus Settings [78]
- AF w/ shutter (still image) [79]
- AF On [80]
- Eye AF [81]
- Measuring the exact distance to the subject [82]

Adjusting the exposure

- Exposure Comp. [83]
- Exposure compensation dial [84]
- Metering Mode [85]
- AE lock [86]
- AEL w/ shutter (still image) [87]
- Exp.comp.set [88]
- Zebra [89]
- Exposure Set. Guide [90]
- Exposure step [91]
- Dial Ev Comp [92]
- Reset EV Comp. [93]

Selecting a drive mode (Continuous shooting/Self-timer)

- Drive Mode [94]
- Cont. Shooting [95]
- Spd Priority Cont. [96]
- Self-timer [97]
- Self-timer(Cont) [98]
- Cont. Bracket [99]

- Single Bracket [100]
- WB bracket [101]
- DRO Bracket [102]
- Bracket order [103]

Selecting the ISO sensitivity

- ISO [104]
- Multi Frame NR [105]

Correcting the brightness or contrast

- D-Range Opt. (DRO) [106]
- Auto HDR [107]

Adjusting color tones

- White Balance [108]
- Capturing a basic white color in[Custom Setup] mode [109]

Selecting an effect mode

- Picture Effect [110]
- Creative Style [111]

Recording movies

- Movie recording formats [112]
- File Format (movie) [113]
- Record Setting (movie) [114]
- Dual Video REC [115]
- Marker Display [116]
- Marker Settings [117]
- Audio Recording [118]
- Audio Level Display [119]
- Audio Rec Level [120]
- Audio Out Timing [121]

- Wind Noise Reduct. [122]
- Auto Slow Shut. (movie) [123]
- MOVIE Button [124]
- Picture Profile [125]
- Video Light Mode [126]

Customizing the shooting functions for convenient use

- Memory [127]
- Function Menu Set. [128]
- Custom Key Settings [129]
- Function of the control wheel [130]
- Function of the focus hold button [131]
- Function of the AEL button [132]
- Function of the AF/MF button [133]
- Function of the Custom button [134]
- Function of the center button [135]
- Function of the left button [136]
- Function of the right button [137]
- Function of the down button [138]
- Dial Setup [139]

Setting the other functions of this product

- Smile/Face Detect. [140]
- Soft Skin Effect (still image) [141]
- Face Registration (New Registration) [142]
- Face Registration (Order Exchanging) [143]
- Face Registration (Delete) [144]
- Red Eye Reduction [145]
- Auto Obj. Framing (still image) [146]
- SteadyShot [147]
- Long Exposure NR (still image) [148]
- High ISO NR (still image) [149]

- Color Space (still image) [150]
- Grid Line [151]
- Auto Review [152]
- Live View Display [153]
- FINDER/MONITOR [154]
- Release w/o Lens [155]
- Silent Shooting [156]
- e-Front Curtain Shut. [157]
- S. Auto Img. Extract. [158]
- APS-C Size Capture [159]
- Shading Comp. [160]
- Chro. Aber. Comp. [161]
- Distortion Comp. [162]
- Dial / Wheel Lock [163]
- Deactivate Monitor [164]
- Aperture Preview [165]
- Shot. Result Preview [166]

Viewing

Viewing still images

- Playing back images [167]
- Playback zoom [168]
- Image Index [169]
- Switching the screen display (during playback) [170]

Deleting images

- Deleting a displayed image [171]
- Deleting multiple selected images [172]

Playing back movies

- Playing back movies [173]

Viewing panoramic images

- Playing back panoramic images [174]

Printing

- Specify Printing [175]

Using viewing functions

- View Mode [176]
- Display Rotation [177]
- Slide Show [178]
- Rotate [179]
- Protect [180]
- 4K Still Image PB [181]

Viewing images on a TV

- Viewing images on an HD TV [182]
- Viewing images on a “BRAVIA” Sync-compatible TV [183]

Changing settings

Setup menu

- Monitor Brightness [184]
- Viewfinder Bright. [185]
- Finder Color Temp. [186]
- Volume Settings [187]
- Audio signals [188]
- Upload Settings(Eye-Fi) [189]
- Tile Menu [190]
- Mode Dial Guide [191]
- Delete confirm. [192]
- Display Quality [193]

- Pwr Save Start Time [194]
- PAL/NTSC Selector [195]
- Cleaning Mode [196]
- Demo Mode [197]
- TC/UB Settings [198]
- Remote Ctrl [199]
- HDMI Resolution [200]
- 24p/60p Output (movie) (Only for 1080 60i compatible models)[201]
- CTRL FOR HDMI [202]
- HDMI Info. Display [203]
- TC Output (movie) [204]
- REC Control (movie) [205]
- HDMI 4K Output (movie) [206]
- USB Connection [207]
- USB LUN Setting [208]
- Language [209]
- Date/Time Setup [210]
- Area Setting [211]
- Format [212]
- File Number [213]
- Select REC Folder [214]
- New Folder [215]
- Folder Name [216]
- Recover Image DB [217]
- Display Media Info. [218]
- Version [219]
- Certification Logo (Overseas model only) [220]
- Setting Reset [221]

Using Wi-Fi functions

Connecting this product and a Smartphone

- PlayMemories Mobile [222]
- Connecting an Android smartphone to this product [223]
- Connecting the product to an iPhone or iPad [224]
- Calling up an application using [One-touch(NFC)] [225]

Controlling this product using a Smartphone

- Smart Remote Embedded [226]
- One-touch connection with an NFC-enabled Android smartphone (NFC One-touch remote) [227]

Transferring images to a Smartphone

- Send to Smartphone [228]
- Sending images to an Android smartphone (NFC One-touch Sharing) [229]

Transferring images to a computer

- Send to Computer [230]

Transferring images to a TV

- View on TV [231]

Changing the settings of Wi-Fi functions

- Airplane Mode [232]
- WPS Push [233]
- Access Point Set. [234]
- Edit Device Name [235]
- Disp MAC Address [236]
- SSID/PW Reset [237]
- Reset Network Set. [238]

Adding applications to the product

PlayMemories Camera Apps

- PlayMemories Camera Apps [239]
- Recommended computer environment [240]

Installing the applications

- Opening a service account [241]
- Downloading applications [242]
- Downloading applications directly to the product using the Wi-Fi function [243]

Starting the applications

- Launching the downloaded application [244]

Managing the applications

- Uninstalling applications [245]
- Changing the order of applications [246]
- Confirming the account information of PlayMemories Camera Apps [247]

Viewing on computers

Recommended computer environment

- Recommended computer environment [248]

Using the software

- PlayMemories Home [249]
- Installing PlayMemories Home [250]
- Software for Mac computers [251]
- “Image Data Converter” [252]
- Installing “Image Data Converter” [253]
- Accessing “Image Data Converter Guide” [254]
- “Remote Camera Control” [255]
- Installing “Remote Camera Control” [256]
- Accessing the Help of Remote Camera Control [257]

Connecting this product and a computer

- Connecting the product to a computer [258]
- Importing images to the computer [259]
- Disconnecting the product from the computer [260]

Creating a movie disc

- Disc type [261]
- Selecting the disc creation method [262]
- Creating a disc with a device other than a computer [263]
- Creating Blu-ray Discs [264]

Precautions/This product

Precautions

- Precautions [265]
- On the internal rechargeable battery [266]
- Notes on the battery pack [267]
- Battery pack and battery charger [268]
- Charging the battery pack [269]
- Memory card [270]

Cleaning this product

- On cleaning [271]

Number of recordable still images and recordable time of movies

- Number of still images [272]
- Recordable time of movies [273]

Using this product abroad

- Plug adaptor [274]
- On TV color systems [275]

Other information

- Mount Adaptor [276]
- LA-EA1 Mount Adaptor [277]
- LA-EA2 Mount Adaptor [278]
- LA-EA3 Mount Adaptor [279]
- LA-EA4 Mount Adaptor [280]
- Vertical grip [281]
- License [282]

Trademarks

- Trademarks [283]

Troubleshooting

If you have problems

If you have problems

- Troubleshooting [284]

Troubleshooting

Battery pack and power

- You cannot insert the battery pack into the product. [285]
- You cannot turn on the product. [286]
- The power turns off suddenly. [287]
- The remaining battery level indicator shows an incorrect level. [288]
- The charge lamp on the product/the CHARGE lamp of the battery charger flashes when charging the battery pack. [289]
- The battery pack inserted in the camera is not charging. [290]

- The battery pack is not charged. [291]
- The monitor does not turn on even when the product is turned on. [292]

Shooting still images/movies

- You cannot record images. [293]
- Recording takes a long time. [294]
- The image is out of focus. [295]
- The angle of view changes little by little while shooting images. [296]
- The recording date and time are not displayed on the screen. [297]
- The date and time are recorded incorrectly. [298]
- The aperture value and/or shutter speed and/or metering indicator flashes. [299]
- The image colors are not correct. [300]
- Noise appears in the image when you view the screen in a dark place. [301]
- The eyes of the subject come out red. [302]
- Dots appear and remain on the screen. [303]
- You cannot shoot images continuously. [304]
- The image is not clear in the viewfinder. [305]
- The image is whitish (Flare)./Blurring of light appears on the image (Ghosting). [306]
- The corners of the picture are too dark. [307]
- The image is blurred. [308]
- The LCD screen darkens after a short period of time passed. [309]
- The control dial or control wheel does not work. [310]

Viewing images

- Images cannot be played back. [311]
- The date and time are not displayed. [312]
- The image cannot be deleted. [313]
- The image was deleted by mistake. [314]
- A DPOF mark cannot be put. [315]

Wi-Fi

- You cannot find the wireless access point to be connected. [316]

- [WPS Push] does not work. [317]
- [Send to Computer] is canceled halfway. [318]
- You cannot send movies to a smartphone. [319]
- [Smart Remote Embedded] or [Send to Smartphone] is canceled halfway. [320]
- The shooting screen for [Smart Remote Embedded] is not displayed smoothly./The connection between this product and the smartphone is disconnected. [321]
- You cannot use One-Touch connection (NFC). [322]

Computers

- The computer does not recognize this product. [323]
- You cannot import images. [324]
- The image and sound are interrupted by noise when viewing a movie on a computer. [325]
- Images exported from a computer cannot be viewed on this product. [326]

Memory cards

- Formatted the memory card by mistake. [327]

Printing

- You cannot print images. [328]
- The color of the image is strange. [329]
- Images are printed with both edges cut off. [330]
- You cannot print images with the date. [331]

Others

- The lens gets fogged. [332]
- The product becomes warm when you use it for a long time. [333]
- The Clock Set screen appears when you turn on the product. [334]
- The number of recordable images does not decrease, or decreases two images at a time. [335]
- The product does not work properly. [336]
- “--E-” appears on the screen. [337]

Messages

Messages

- Warning messages [338]

Situations this product has difficulty handling

Situations this product has difficulty handling

- Situations this product has difficulty handling [339]

Checking the camera and the supplied items

The number in parentheses indicates the number of pieces.

- Camera (1)
- AC-UD10/AC-UUD11 AC Adaptor (1)
  The shape of the AC Adaptor differs for each country/region.
- BC-TRW Battery charger (1)
- Power cord (mains lead) (1)* (not supplied in the U.S.A. and Canada)

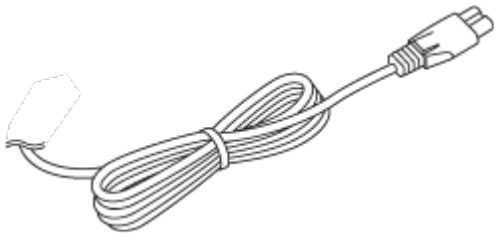

*Multiple power cords may be supplied with your camera. Use the appropriate one that matches your country/region.

- NP-FW50 Rechargeable battery pack (2)

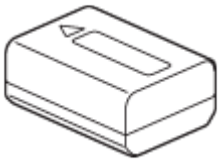

- Micro USB Cable (1)

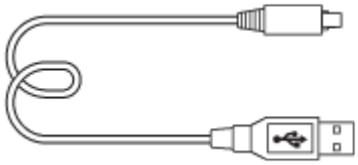

- Shoulder strap (1)

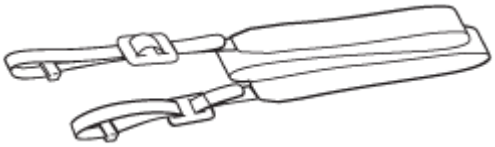

- Body cap (1) (Attached on the camera)

- Cable protector (1)

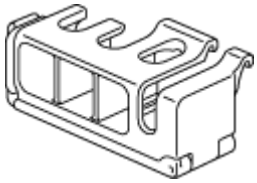

- Shoe cap (1) (Attached on the camera)
- Eyepiece cup (1) (Attached on the camera)
- Instruction Manual (1)
- Wi-Fi Connection/One-touch (NFC) Guide (1)

Identifying parts (Front side)

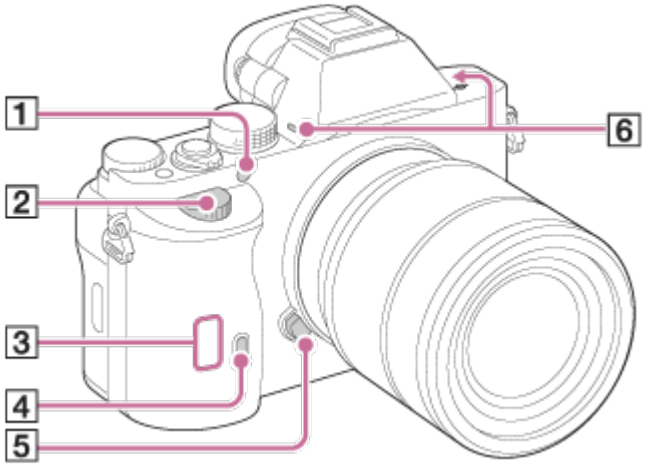

When the lens is removed

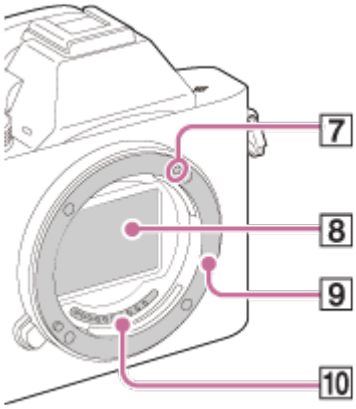

1. AF illuminator/Self-timer lamp
2. Front dial
3. Wi-Fi sensor (built-in)
4. Remote sensor
5. Lens release button
6. Built-in microphone*
7. Mount index
8. Image sensor**
9. Mount
10. Contacts**

*Do not cover this part during movie recording. Doing so may cause noise or lower the volume.

**Do not directly touch these parts.

Identifying parts (Rear side)

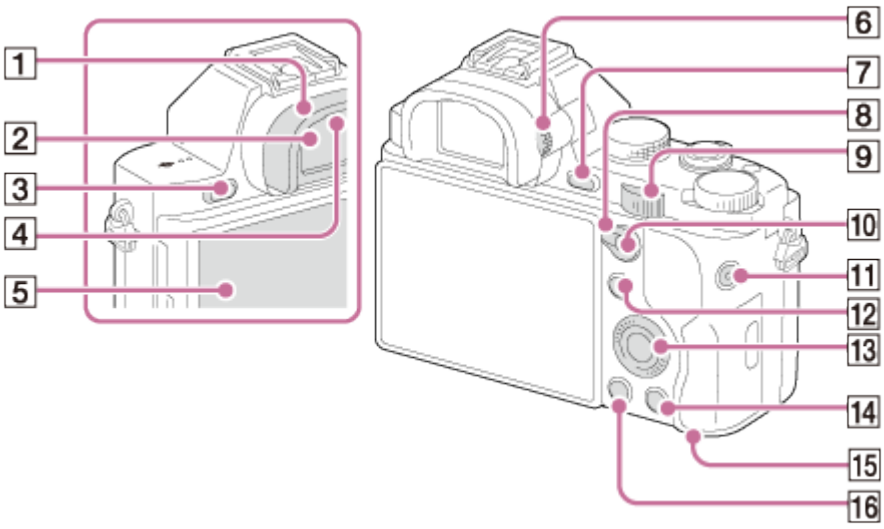

1. Eyepiece cup

2. Viewfinder
3. MENU button
4. Eye sensor
5. Monitor
   - You can adjust the monitor to an easily viewable angle and shoot from any position.

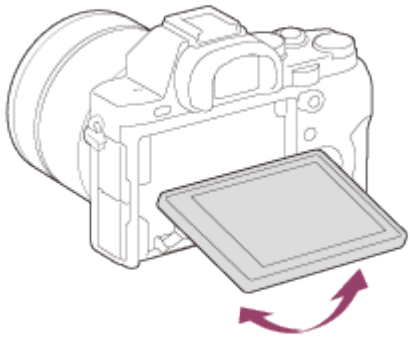

6. Diopter-adjustment dial
   - Adjust the diopter-adjustment dial according to your eyesight until the display appears clearly in the viewfinder.

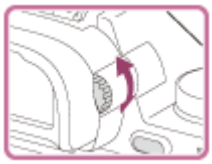

7. For shooting: C2 (Custom2) button
   For viewing: (Enlarge) button
8. AF/MF/AEL switch lever
9. Rear dial
10. For shooting: AF/MF (Auto focus/manual focus) button/ AEL button
    For viewing: (Image index) button
11. MOVIE button
12. For shooting: Fn button
    For viewing: (Send to Smartphone) button
    - You can display the screen for [Send to Smartphone] by pressing this button.
    - When you attach a vertical grip (sold separately), pressing the (Image rotation) button on the vertical grip displays the [Send to Smartphone] screen.
13. Control wheel
14. For shooting: C3 (Custom3) button
    For viewing: (Delete) button
15. Access lamp
16. (Playback) button

Identifying parts (Top side/Side view)

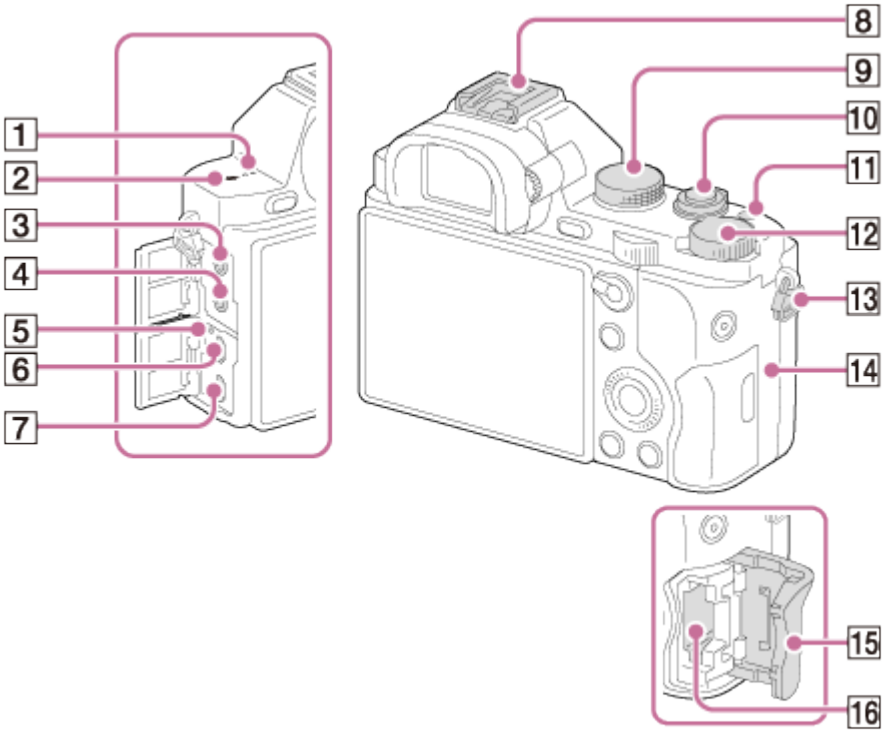

1. Speaker
2. Image sensor position mark
3. (Microphone) jack
   - When an external microphone is connected, the microphone is turned on automatically.
     If the external microphone is a plugin-power type, the power of the microphone is supplied by the camera.
4. (Headphones) jack
5. Charge lamp
6. Multi/Micro USB Terminal*
   - Supports Micro USB compatible device.
7. HDMI micro jack
8. Multi interface shoe*
   - Some of the accessories may not be inserted fully and protrude backward from the Multi interface shoe.
     However, when the accessory reaches the front end of the shoe, the connection is completed.
9. Mode dial
10. Power switch/Shutter button
11. C1 (Custom 1) button
12. Exposure compensation dial
13. Hooks for shoulder strap

- Attach both ends of the strap onto the camera.

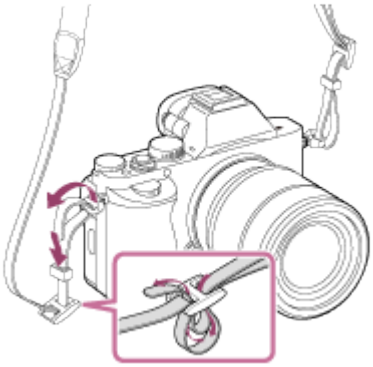

14. (N mark)
    - This mark indicates the touch point for connecting the camera and an NFC-enabled Smartphone.
      For details on the location of the (N mark) on your Smartphone, refer to the operating instructions of the Smartphone.

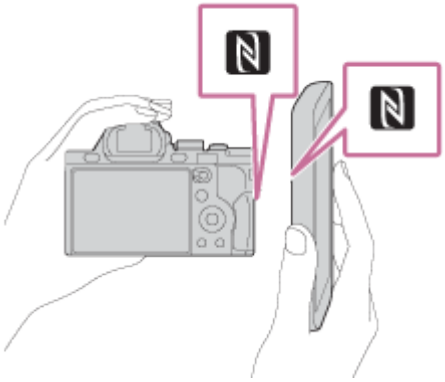

    - NFC (Near Field Communication) is an international standard of short-range wireless communication technology.
15. Memory card cover
16. Memory card slot

*For details on compatible accessories for the Multi interface shoe and the Multi/Micro USB Terminal, visit the Sony website, or consult your Sony dealer or local authorized Sony service facility.
You can also use accessories that are compatible with the Accessory Shoe.
Operations with other manufactures' accessories are not guaranteed.

Multi Interface Shoe

Accessory Shoe

Attaching a cable protector

Use the cable protector to prevent the HDMI cable from being disconnected from the camera when shooting images. Raise the monitor and insert the HDMI cable, and then attach the cable protector as shown below.

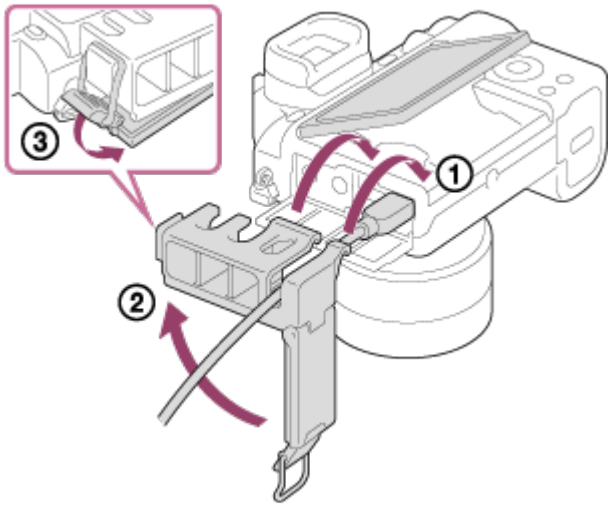

- Make sure the connector cover is outside the cable protector when you attach the cable protector.

Identifying parts (Bottom view)

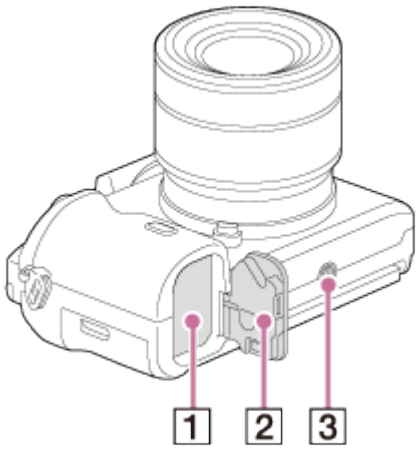

1. Battery insertion slot
2. Battery cover
3. Tripod socket hole
    - Use a tripod with a screw less than 5.5 mm (7/32 inches) long.
      Otherwise, you cannot firmly secure the camera, and damage to the camera may occur.

Connection plate cover

Use this when using an AC-PW20 AC Adaptor (sold separately).
Insert the connection plate into the battery compartment, and then pass the cord through the

connection plate cover as shown below.

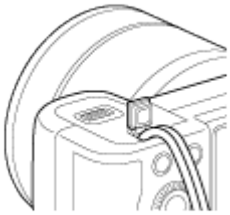

- Make sure that the cord is not pinched when you close the cover.

List of icons on the screen

The displayed contents and their positions shown below are just a guideline, and may differ from the actual display.

Monitor mode

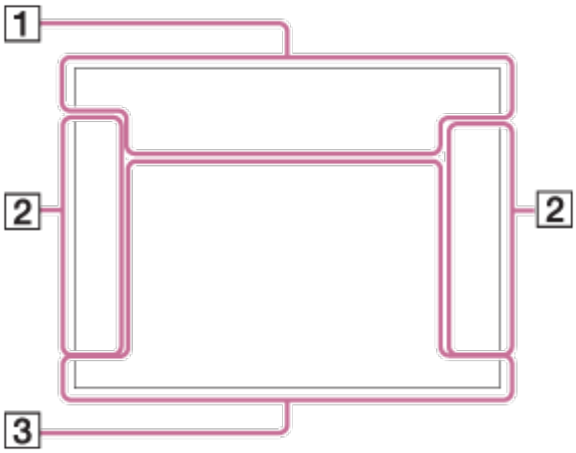

For playback (Basic information display)

Viewfinder mode

In Auto Mode or Scene Selection mode

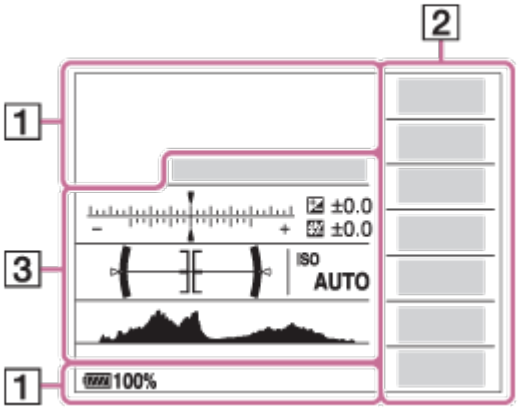

P/A/S/M/Sweep Panorama mode

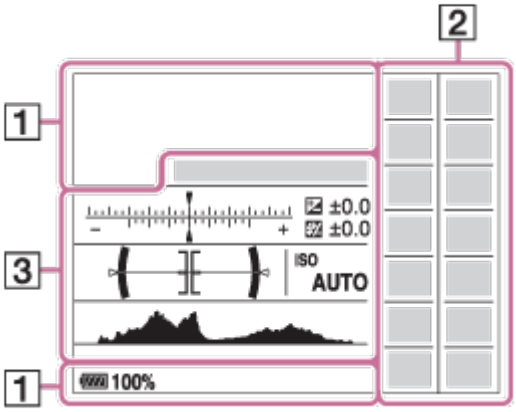

1. P P* A S M
   Shooting mode

   1 2
   Register number

   Scene Recognition icons

   OFF
   Memory card/Upload

   100

   Remaining number of recordable images

   3:2 16:9
   Aspect ratio of still images

   12M / 10M / 5.1M / 4.3M / 3.0M / 2.6M / 1.3M / 1.1M

   WIDE STD
   Image size of still images

RAW RAW+J X.FINE FINE STD

Image quality of still images

120p 100p 60p 50p 60i 50i 30p 24p 25p

Frame rate of movies

50 FX FH PS 1080 VGA

Image size of movies

100%

Remaining battery

Remaining battery warning

Flash charge in progress

APS-C Size Capture

VIEW

Setting Effect OFF

ON

AF Illuminator

NFC is activated

Airplane Mode

OFF

No audio recording of movies

Wind Noise Reduction

OFF

SteadyShot/Camera shake warning

Overheating warning

FULL ERROR

Database file full/Database file error

S C D

Smart Zoom/ Clear Image Zoom/Digital Zoom

○

Spot metering area

Digital level gauge

Audio level

View Mode

100-0003

Folder-file number

Protect

XAVC S AVCHD MP4

Recording mode of movies

DPOF

DPOF set

Auto Obj. Framing

00:00:00:00

Time code (hour:minute:second:frame)

00 00 00 00

User Bit

Dual Video REC

Video Light Mode

24p 30p 25p

HDMI 4K Output

PC Remote

Remote controller

2. Drive mode

Flash mode/Red-eye reduction

±0.0

Flash compensation

AF-S AF-C MF DMF

Focus mode

Focus area

AUTO OFF

Auto Obj. Framing

OFF ON ON ON ON

Smile/Face Detect./Smile Shutter

Metering mode

AWB −1 0 +1 +2 7500K A5 G5

White balance (Auto, Preset, Underwater Auto, Custom, Color temperature, Color filter)

D-R OFF DRO AUTO HDR AUTO

D-Range Optimizer/Auto HDR

Std. Vivid Ntrl Clear Deep Light Port. Land. Sunset Night Autm B/W Sepia +3 +3 +3

Creative Style/Contrast, Saturation, Sharpness

Toy Norm Pop Pos Pos Rtro Sftfl key Part R Part G Part B Part Y HC BW Soft Mid Pntg Mid Rich BW WtrC Ilus Mid Mini AUTO OFF

Picture Effect

Smile detection sensitivity indicator

PP1 - PP7

PP OFF

Picture Profile

3. **Lock-on AF**

Guide display for Lock-on AF

−5 4 3 2 1 0 1 2 3 4 5+

EV scale

M.M.

Exposure compensation/Metered Manual

REC 0:12

Recording time of the movie (m:s)

Focus

1/250

Shutter speed

F3.5

Aperture Value

ISO400

ISO AUTO

ISO sensitivity

AE lock/FEL lock

Shutter speed indicator

Aperture indicator

Histogram

Auto HDR image warning

Picture Effect error

2014-1-1

10:37PM

Date of recording

3/7

File number/Number of images in the view mode

REC Control

Using the shoulder strap

Attach the shoulder strap to prevent damage caused by dropping the product.

1. Attach both ends of the strap.

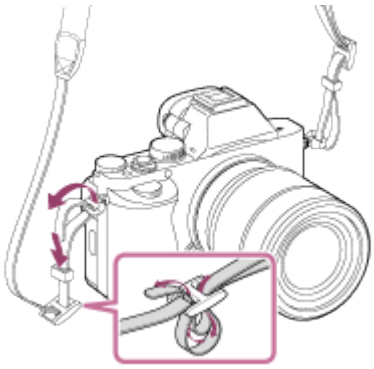

[8] How to Use | Before Use | Attaching the eyepiece cup

Attaching the eyepiece cup

It is recommended that you attach the eyepiece cup when you intend to use the viewfinder.

1. Match the eyepiece cup to the groove on the viewfinder and slide it into place.
   - To remove the eyepiece cup, grasp it on the left and right sides and lift it up.

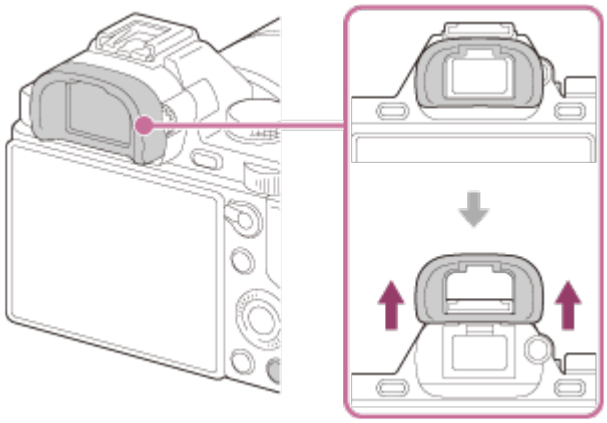

[9] How to Use | Before Use | Adjusting the viewfinder

Adjusting the viewfinder (diopter-adjustment)

Adjust the diopter scale to your eyesight until the display appears clearly in the viewfinder. If it is difficult to turn the diopter-adjustment dial, remove the eyepiece cup and then adjust the dial.

1. Turn the diopter-adjustment dial.

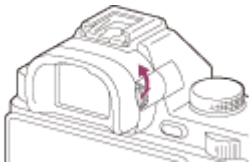

[10] How to Use | Before Use | In-Camera guide

About the [In-Camera Guide]

The [In-Camera Guide] displays descriptions of MENU items, Fn (Function) button, and settings, and if a function cannot be set, the reason why.

1. Press the MENU or Fn button.
2. Select the desired MENU item using up/down/left/right side on the control wheel.
3. Press the button to which the [In-Camera Guide] function is assigned.
   The operation guide for the MENU item you have selected in step 2 is displayed.
   - If you press the ● on the center of the control wheel after selecting an item shown in gray, the reason the item cannot be set is displayed.

Note

- Assign the [In-Camera Guide] function to a button in advance using the [Custom Key Settings].

[11] How to Use | Preparing the camera | Charging the battery pack

Charging the battery pack using a charger

When using the camera for the first time, be sure to charge the InfoLITHIUM NP-FW50

(supplied). The InfoLITHIUM battery pack can be charged even when it is not fully depleted. It can also be used when it is not fully charged. The charged battery pack discharges little by little even when it is not being used. To avoid missing a shooting opportunity, charge the battery pack again before shooting.

1. Insert the battery pack into the battery charger.
   Push the battery pack lightly until it clicks.

2. Connect the battery charger to the wall outlet (wall socket).

   Light on: Charging
   Light off: Charge completed
   Charging time (Full charge): Approx. 220 minutes

   - When charging a fully depleted battery pack at a temperature of 25°C (77°F).
   - The CHARGE lamp **(A)** turns off when charging is completed.

Note

- The charging time differs depending on the remaining charge of the battery pack and on the charging conditions.
- Be sure to use only genuine Sony brand battery packs.
- We recommend charging the battery pack at an ambient temperature of between 10°C to 30°C (50°F to 86°F). You may not be able to efficiently charge the battery pack outside this temperature range.
- Connect the battery charger to the nearest wall outlet (wall socket). If malfunctions occur while using the charger, disconnect the plug from the wall outlet (wall socket) immediately to disconnect from the power source.
- Even when the CHARGE lamp of this battery charger is off, the power is not disconnected. If any trouble occurs while this unit is in use, unplug it from the wall outlet (wall socket) to disconnect the power.
- When the camera is being used for the first time or when you use a battery pack that has

not been used for a long time, the CHARGE lamp may flash quickly when the battery is charged for the first time. If this happens, remove the battery pack from the charger and then re-insert it to recharge.
- Do not continuously or repeatedly charge the battery pack without using it if it is already fully charged or close to fully charged. Doing so may cause a deterioration in battery performance.

Charging the battery pack while it is inserted in the camera

When using the camera for the first time, be sure to charge the battery pack. The charged battery pack will discharge little by little, even if you do not use it. To avoid missing a shooting opportunity, charge the battery pack before shooting.

1. Turn the power OFF.

2. Connect the camera with the battery pack inserted to the AC Adaptor (supplied) using the micro USB cable (supplied), and connect the AC Adaptor to the wall outlet (wall socket).

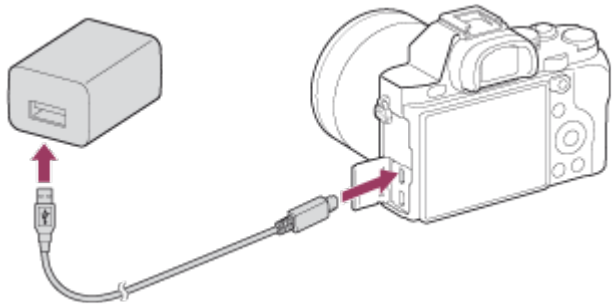

Charge lamp
Lit: Charging
Off: Charging finished
Flashing: Charging error or charging paused temporarily because the camera is not within the proper temperature range

Charging time (Full charge)

The charging time is approximately 150 min. using the AC Adaptor (supplied).

- The charging time may differ depending on the remaining capacity of the battery pack or the charging conditions.
- The battery pack can be charged even when it is not fully depleted.
- The above charging time applies when charging a fully depleted battery pack (supplied) at

a temperature of 25°C (77°F). Charging may take longer depending on the conditions of use and the environment.

- To check the remaining battery charge, detach the micro USB cable and check the (remaining charge indicator) on the screen.

Note

- If the charge lamp flashes when the battery pack is not fully charged, remove the battery pack from the camera and then re-insert it to recharge.
- If the charge lamp on the camera flashes when the AC Adaptor is connected to the wall outlet (wall socket), this indicates that charging is temporarily stopped because the temperature is outside the recommended range. When the temperature gets back within the appropriate range, the charging resumes. We recommend charging the battery pack at an ambient temperature of between 10°C to 30°C (50ºF to 86ºF).
- Connect the AC Adaptor to the nearest wall outlet (wall socket). If malfunctions occur while using the AC Adaptor, immediately disconnect the plug from the wall outlet (wall socket) to disconnect from the power source.
- When you use a completely new battery pack or a battery pack that has not been used for a long time, the charge lamp may flash quickly when the battery is charged for the first time. If that happens, remove the battery pack from the camera and then re-insert it to recharge.
- Do not continuously or repeatedly charge the battery pack without using it if it is already fully charged or close to fully charged. Doing so may cause a deterioration in battery performance.
- When charging is finished, disconnect the AC Adaptor from the wall outlet (wall socket).
- Be sure to use only genuine Sony brand battery packs, micro USB cables (supplied) and AC Adaptors (supplied).

Charging by connecting to a computer

The battery pack can be charged by connecting the camera to a computer using a micro USB cable.

1. Turn off the product, and connect to the USB terminal of the computer.

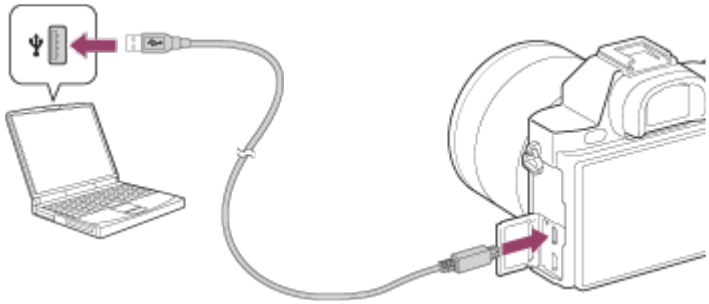

Note

- Note the following points when charging via a computer:
  - If the product is connected to a laptop computer that is not connected to a power source, the laptop battery level decreases. Do not charge for an extended period of time.
  - Do not turn on/off or restart the computer, or wake the computer from sleep mode when a USB connection has been established between the computer and the camera. Doing so may cause a malfunction. Before turning on/off or restarting the computer, or waking the computer from sleep mode, disconnect the camera from the computer.
  - Proper operation cannot be guaranteed on all types of computers.
  - No guarantees are made for charging using a custom-built computer or a modified computer.
  - The camera may not operate correctly when other USB devices are used at the same time.

Inserting the battery pack into the camera

How to insert the battery pack into the camera

1. Slide the open lever to open the battery cover.

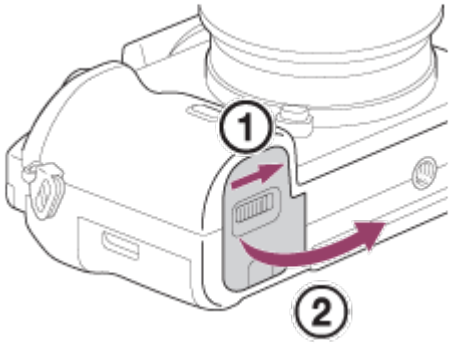

2. Insert the battery pack while pressing the lock lever**(A)** with the tip of the battery until the battery locks into place.

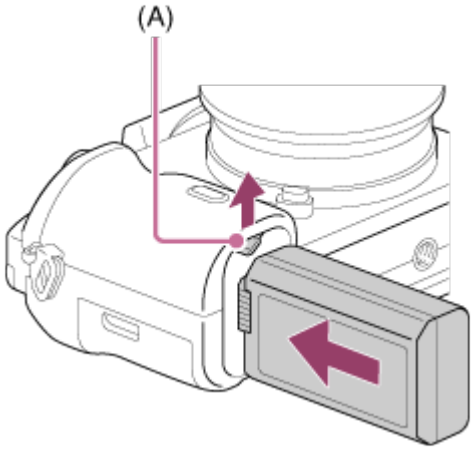

3. Close the cover.

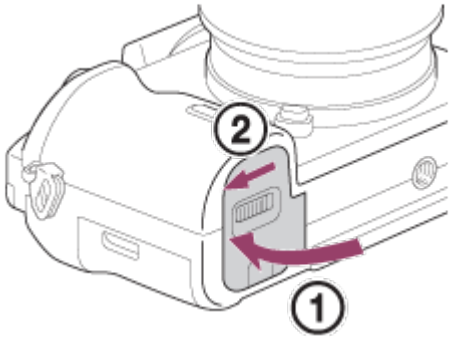

Battery life and the number of images that can be recorded/played back using a battery pack

Screen mode

Shooting (still images):
Battery life: approx. 190 min., Number of images: approx. 380
Actual shooting (movies):
Battery life: approx. 60 min.
Continuous shooting (movies):
Battery life: approx. 90 min.
Viewing (still images):
Battery life: approx. 280 min., Number of images: approx. 5600

Viewfinder mode

Shooting (still images):
Battery life: approx. 160 min., Number of images: approx. 320
Actual shooting (movies):

Battery life: approx. 55 min.
Continuous shooting (movies):
Battery life: approx. 90 min.

Note

- The above battery life and number of images applies when the battery pack has been fully charged. The battery life and number of images may decrease depending on the conditions of use.
- The battery life and number of images that can be recorded is for shooting under the following conditions:
  - The battery pack is used at an ambient temperature of 25°C (77°F).
  - Using the lens FE 28-70mm F3.5-5.6 OSS (sold separately)
  - Using Sony Memory Stick PRO Duo media (sold separately)
  - [Viewfinder Bright.]: [Manual][±0]
  - [Monitor Brightness]: [Manual][±0]
  - [Display Quality]: [Standard]
- The number for "Shooting (still images)" is based on the CIPA standard, and is for shooting under the following conditions (CIPA: Camera & Imaging Products Association):
  - Focus Mode: [Single-shot AF]
  - One picture is taken every 30 seconds.
  - The power is turned on and off once every ten times.
- The number for "Actual shooting (movies)" is based on the CIPA standard, and is for shooting under the following conditions:
  - The image quality is set to 60i 17M (FH) .
  - Actual shooting (movies): Battery life based on repeated shooting, zooming, shooting stand-by, turning on/off, etc.
  - Continuous movie shooting: Battery life based on non-stop shooting until the limit (29 minutes) has been reached, and then continued by pressing the MOVIE button again. Other functions, such as zooming, are not used.
- If the remaining battery is not displayed, press the DISP (Display Setting).

Supplying power using a wall outlet (wall socket)

Power can be supplied to the camera during shooting/playback using an AC adaptor AC-PW20 (sold separately).

1. To supply power to the camera during shooting/playback, connect the camera and the AC adaptor AC-PW20 (sold separately) and plug the AC adaptor to a wall outlet (wall socket).

Note

- You cannot shoot or play back images while the supplied AC adaptor is connected to the camera. If you want to shoot or play back images with power supplied from a wall outlet (wall socket), use the AC-PW20 AC Adaptor (sold separately).

---

[17] How to Use │ Preparing the camera │ Charging the battery pack

Removing the battery pack

How to remove the battery pack

1. Make sure that the access lamp is not lit, and turn off the camera.
2. Slide lock lever **(A)** and remove the battery pack.

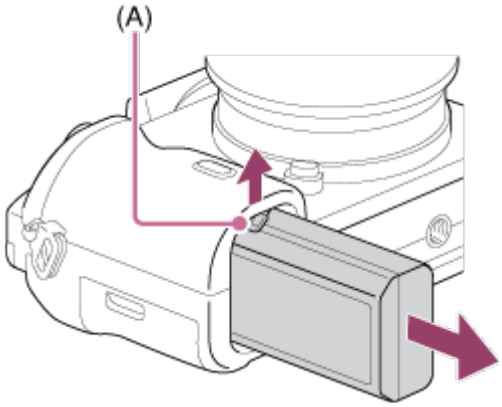

- Be careful not to drop the battery pack.

---

[18] How to Use │ Preparing the camera │ Inserting a memory card (sold separately)

Inserting a memory card

How to insert a memory card

1. Slide the memory card cover to open it.

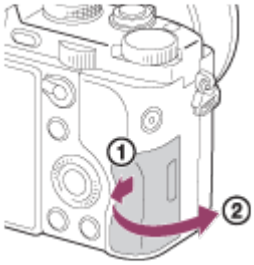

2. Insert the memory card.

- Ensure that the notched corner is facing in the correct direction.
- With the notched corner facing in the direction illustrated, insert the memory card until it clicks into place.

3. Close the memory card cover.

Removing the memory card

How to remove the memory card

1. Open the memory card cover.
2. Make sure that the access lamp **(A)** is not lit.

3. Push in on the memory card once to remove it.

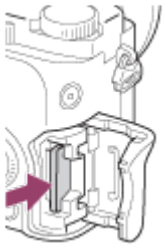

4. Close the memory card cover.

Attaching a lens

Set the power switch of the camera to OFF before attaching the lens.

1. Remove the body cap **(A)** from the camera and the rear lens cap**(B)** from the rear of the lens.

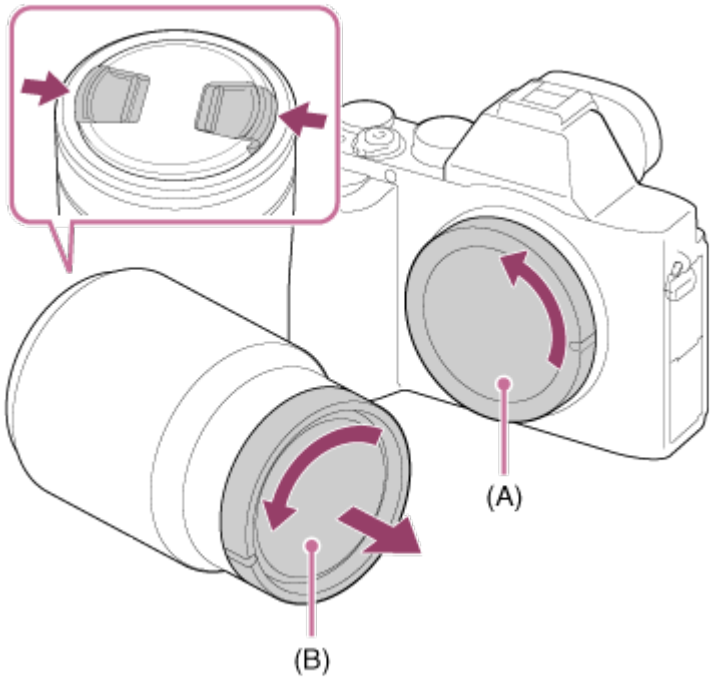

- When changing the lens, work quickly in a dust-free location to keep dust or debris from getting inside the camera.
- When shooting, remove the front lens cap from the front of the lens.

2. Mount the lens by aligning the two white index marks (mounting indexes) on the lens and camera.

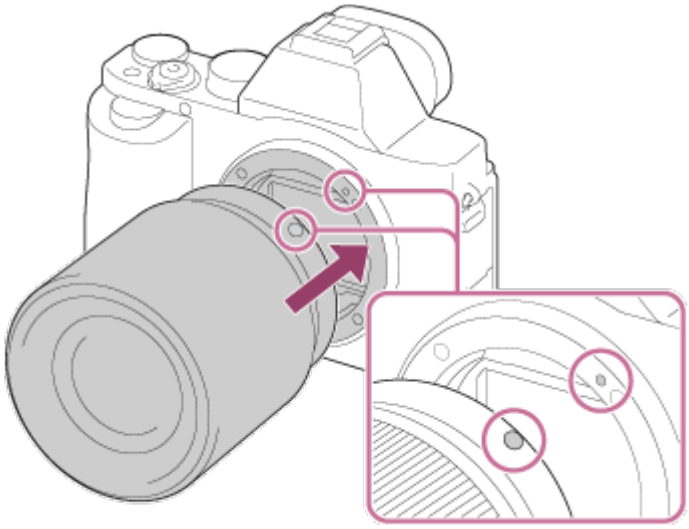

- Hold the camera with the lens facing down to prevent dust and debris from entering the camera.

3. While pushing the lens lightly toward the camera, turn the lens slowly in the direction of the arrow until it clicks into the locked position.

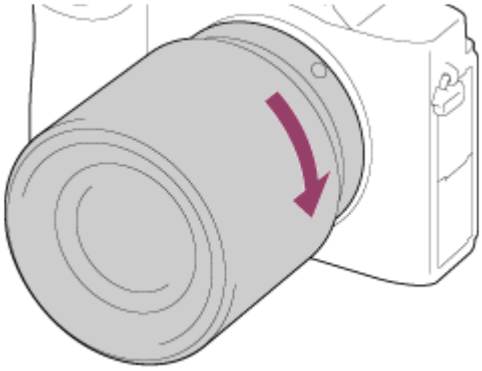

- Be sure to hold the lens straight when attaching it.

Note

- Do not press the lens release button when attaching a lens.
- Do not use force when attaching a lens.
- A Mount Adaptor (sold separately) is required to use an A-mount lens (sold separately). When using the Mount Adaptor, refer to the operating manual supplied with the Mount Adaptor.
- If you want to shoot full-frame images, use a full-frame size compatible lens.
- When you use a lens with a tripod socket, attach a tripod to the tripod socket of the lens to help balance the weight of the lens.
- When carrying the camera with a lens attached, hold both the camera and the lens firmly.
- Do not hold the part of the lens that is extended for zoom or focus adjustment.

Removing the lens

Set the power switch of the camera to OFF before you remove the lens.

1. Keep pressing the lens release button**(A)** and turn the lens in the direction of the arrow until it stops.

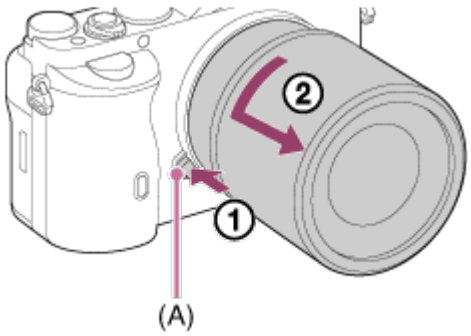

2. Attach the lens caps to the front and rear of the lens and the body cap to the camera.

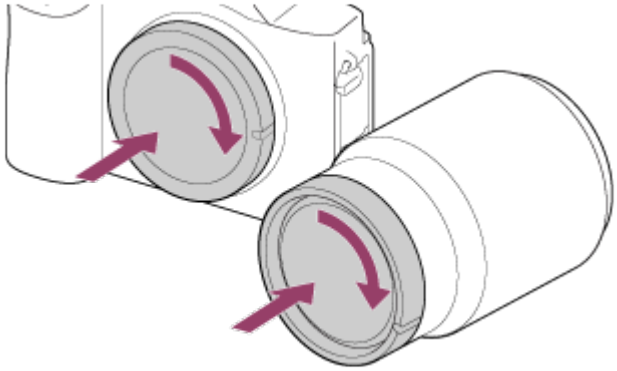

- Remove any dust from the caps before attaching them.

Attaching the lens hood

We recommend that you use the lens hood to prevent light outside the shooting frame from affecting the image.

1. Match the shape of the lens hood mounting part and lens head, and turn the lens hood clockwise until it clicks.

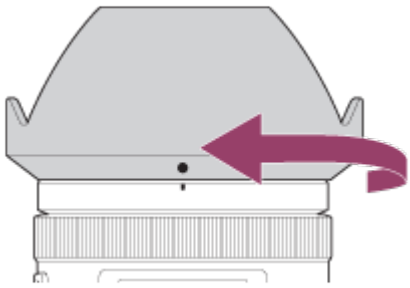

Note

- Attach the lens hood properly. Otherwise, the lens hood may not have any effect or may be partially reflected in the image.
- When the lens hood is attached properly, the lens hood index (red line) matches the red index mark on the hood.
- Remove the lens hood when using the flash. Otherwise, the lens hood blocks the flash light and may appear as a shadow on the image.
- To store the lens hood after shooting, attach the lens hood to the lens backward.

Notes on changing the lens

When changing the lens, if dust or debris gets inside the camera and adheres to the surface of the image sensor (the part that converts the light to an electric signal), it may appear as dark spots on the image, depending on the shooting environment.
This camera is equipped with an anti-dust function that causes the image sensor to vibrate a little when the power is turned off to prevent dust from attaching to the image sensor.
However, always make sure to attach/remove the lens quickly away from dusty locations.

Setting the date and time

When you turn on the camera for the first time or after you have initialized the functions, the setting screen for the date and time appears.

1. Set the power switch to ON to turn on the camera.
   The setting screen for the date and time appears.
2. Check that [Enter] is selected on the screen, then press ● on the control wheel.
3. Select your desired geographic location, and then press ● .
4. Select a setting item using the up/down side of the control wheel or by turning the control wheel, then press ● in the center.
5. Set [Daylight Savings], [Date/Time], and [Date Format] using the up/down/left/right sides, then press ● in the center.
   - Midnight is indicated as 12:00 AM, and noon as 12:00 PM.
6. Repeat steps 4 and 5 to set other items, then select[Enter] and press ● in the center.
   - To cancel the date and time setting procedure, press the MENU button.

Note

- This camera does not have a function for inserting the date on images. You can insert the date on images and then save and print them using PlayMemories Home.
- If the date and time setting is cancelled halfway, the setting screen for the date and time appears every time you turn on the camera.

[25] How to Use │ Confirming the operation method │ Confirming the operation method

Using the control wheel

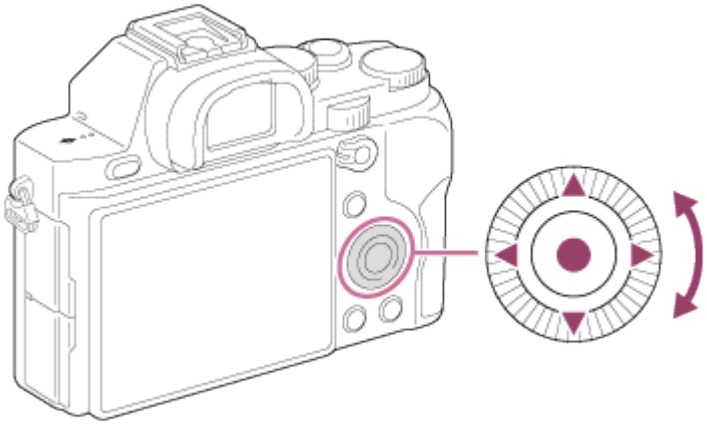

You can select setting items by turning or pressing the top/bottom/right/left side of the control wheel. Your selection is determined when you press ● on the center of the control wheel.

The DISP (Display Setting), ⏱/⧉ (Drive Mode), and WB (White Balance) functions are assigned to the top/left/right side of the control wheel. In addition, you can change the [ISO] settings by turning the control wheel. You can assign selected functions to the left/right/bottom side of the control wheel or to the ● in the center, and to the rotation of the control wheel.

During playback, you can display the next/previous image by pressing the right/left side of the control wheel or by turning the control wheel.

[26] How to Use │ Confirming the operation method │ Confirming the operation method

Using MENU items

In this section, you learn how to change settings related to all camera operations and execute camera functions including shooting, playback, and operation methods.

1. Press MENU button to display the Menu screen.

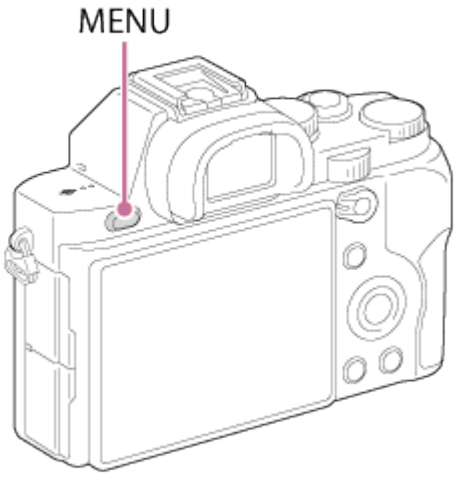

2. Select the desired MENU item using the up/down/left/right side of the control wheel or by turning the control wheel, and then press ● in the center of the control wheel.
   - The display may move directly from step 1 to step 3 depending on the[Tile Menu] setting.

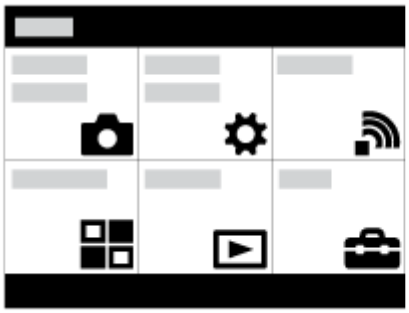

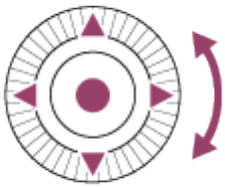

3. Select the desired setting item by pressing the up/down/left/right side on the control wheel or by turning the control wheel, and then press ● on the center of the control wheel.
   - Select an icon at the top of the screen and press the left/right side of the control wheel to move to another MENU item.

4. Select the desired setting value, and press ● to confirm.

Using the Fn (Function) button

You can register frequently used functions to the Fn (function) button and recall them while shooting. Up to 12 frequently used functions can be registered to the Fn (Function) button.

1. Press the Fn button in shooting mode.

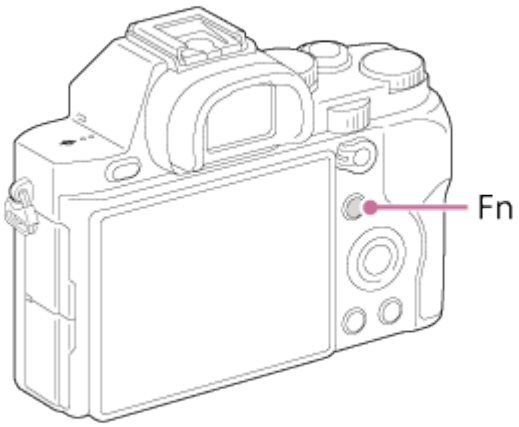

2. Select a function to be registered by pressing the up/down/left/right side of the control wheel.

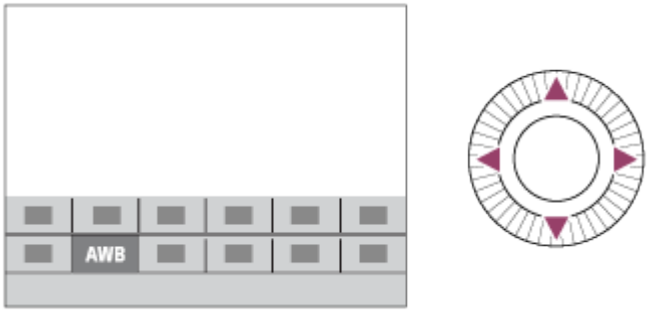

3. Turn the front dial to select the desired setting.
   - Some functions can be fine-tuned using the rear dial.

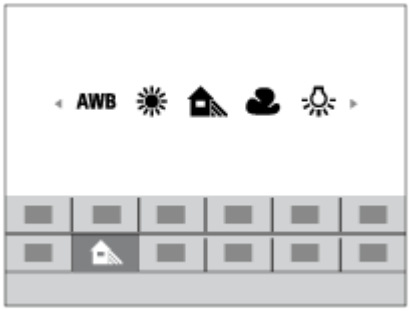

Performing settings on the dedicated screen

- Select the desired function in step 2, then press ● on the center of the control wheel. The dedicated setting screen for the function appears. Follow the operating guide (A) to perform the settings.

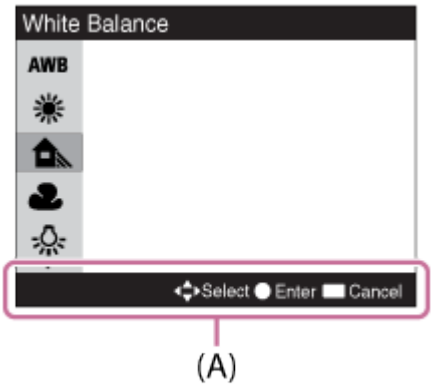

[28] How to Use │ Confirming the operation method │ Confirming the operation method

Using the "Quick Navi"

You can change the settings directly using the Quick Navi screen when using the viewfinder.

1. Press the DISP (Display Setting) button on the control wheel repeatedly until the screen is set to [For viewfinder].
2. Press Fn (Function) button to switch the screen to Quick Navi screen.

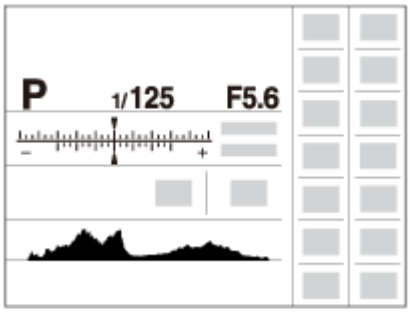

3. Select the desired function by pressing the up/down/left/right side of the control wheel.
4. Turn the front dial to select the desired setting.
   - Some setting values can be finely adjusted by turning the rear dial.

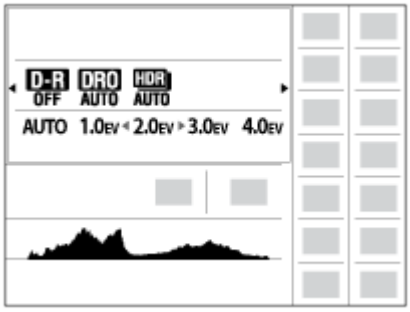

Performing settings on the dedicated screen

- Select the desired function in step 3, then press ● on the center of the control wheel. The dedicated setting screen for the function appears. Follow the operating guide (A) to perform the settings.

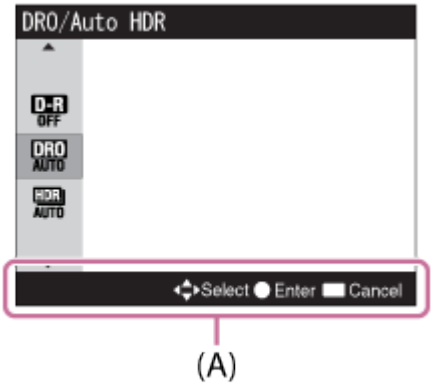

---

[29] How to Use | Shooting | Shooting still images/movies

Shooting still images

Shoots still images.

1. Set the shooting mode to AUTO (Auto Mode).

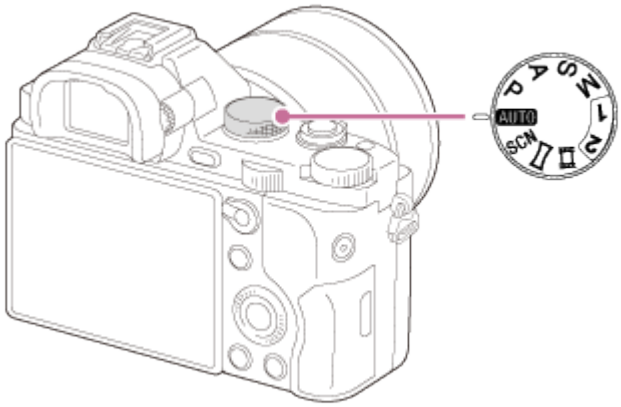

2. Adjust the monitor angle, and hold the camera. Or look through the viewfinder and hold the camera.

3. Press the shutter button halfway down to focus.
   When the image is in focus, the indicator (● or) lights up.

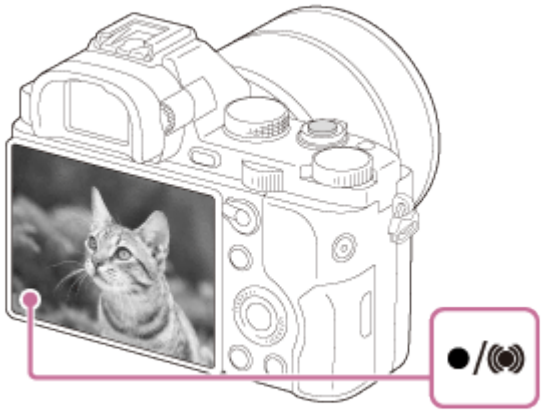

4. Press the shutter button fully down.

Focus indicator

● lights:
Image is in the focus.
● flashes:
The focusing has failed.
(◉) lights:
Image is in the focus. The focused position will change to suit the motion of the subject.
( ) lights:
The focusing is in progress.

Hint

- When the product cannot focus automatically, the focus indicator flashes and the beep does not sound. Either recompose the shot or change the focus setting. When [Continuous AF] is set, the beep does not sound when focus is achieved.
- Focusing may be difficult in the following situations:
  - It is dark and the subject is distant.
  - The contrast between the subject and the background is poor.
  - The subject is seen through glass.
  - The subject is moving quickly.
  - There is reflective light or shiny surfaces.
  - There is a flashing light.
  - The subject is backlit.

Shooting movies

You can record movies by pressing the MOVIE button.

1. Press the MOVIE button to start recording.

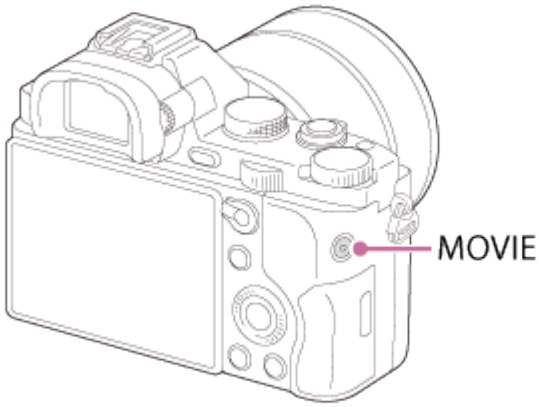

2. Press the MOVIE button again to stop recording.

Note

- To adjust the shutter speed and aperture value to the desired settings, set the shooting mode to (Movie).
- If you use a function such as zoom while shooting a movie, the noise of the product operating will be recorded. The sound of the MOVIE button operating may also be recorded when you press the MOVIE button to stop recording.
- For the continuous shooting time of a movie recording, refer to "Recordable time of movies." When movie recording is finished, you can restart recording by pressing the MOVIE button again. Recording may stop to protect the product depending on the temperature of the product or the battery.
- When shooting, the sound of the shoulder strap hooks (triangular hook) could be recorded, depending on the situation used.
- When recording movies with low ISO sensitivity, if you point the camera at a very bright light source, high intensity areas on the monitor may be recorded in darker tones.

List of mode dial functions

You can select the desired shooting mode by turning the mode dial.

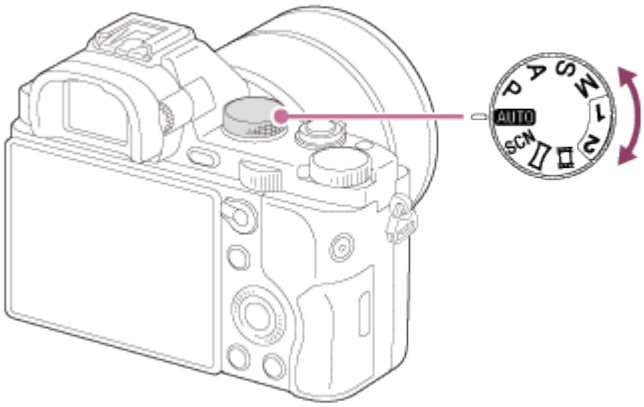

Available functions

AUTO (Auto Mode):
Allows you to shoot still images of any subject under any condition with good results by setting the values determined appropriate by the product.
P (Program Auto):
Allows you to shoot with the exposure adjusted automatically (both the shutter speed and the aperture value (F value)). Also you can select various settings using the menu.
A (Aperture Priority):
Allows you to adjust the aperture and shoot when you want to blur the background, etc.
S (Shutter Priority):
Allows you to shoot fast-moving subjects etc., by manually adjusting the shutter speed.
M (Manual Exposure):
Allows you to shoot still images with the desired exposure by adjusting the shutter speed and the aperture value.
1/2 (Memory recall):
Allows you to shoot an image after recalling often-used modes or numeric settings registered in advance.
(Movie):
Allows you to change the setting for movie recording.
(Sweep Panorama):
Allows you to shoot a panoramic image by compositing the images.
SCN (Scene Selection):
Allows you to shoot with preset settings according to the scene.

Intelligent Auto

The product analyzes the subject, and allows you to shoot with appropriate settings.

1. Set the mode dial to AUTO (Auto Mode).
2. MENU → (Camera Settings) → [Auto Mode] →[Intelligent Auto].
   - When [Mode Dial Guide] is set to [On], you can select the desired settings after you have changed the position of the mode dial.
3. Point the camera to the subject.
   When the camera recognized the scene, the icon for the recognized scene appears on the screen.

4. Adjust the focus and shoot the image.

Note

- The product will not recognize the scene when you shoot images with zoom functions other than optical zoom.
- The product may not properly recognize these scenes under some shooting conditions.

Superior Auto

The product automatically recognizes and evaluates the shooting conditions, and the appropriate settings are set automatically.
The product may shoot multiple images and create a composite image, etc., using more shooting settings than in Intelligent Auto mode to record higher quality images.

1. Set the mode dial to AUTO (Auto Mode).
2. MENU → (Camera Settings) → [Auto Mode] → [Superior Auto].
   - When [Mode Dial Guide] is set to [On], you can select the desired settings after you have changed the position of the mode dial.
3. Point the camera to the subject.

When the camera recognizes a scene, scene recognition icon appears on the screen. If necessary, appropriate shooting function for the recognized scene and the number of times the shutter is released also appear.

4. Adjust the focus and shoot the image.
   When the camera shoots multiple images, it automatically chooses and saves the appropriate image. You can also save all the images by setting the [S. Auto Img. Extract.].

Note

- When the product is used to create composite images, the recording process takes longer than usual.
- The product will not recognize the scene when you use zoom functions other than optical zoom.
- The product may not properly recognize a scene under some shooting conditions.
- When [Quality] is set to [RAW] or [RAW & JPEG], the product cannot create a composite image.

About Scene Recognition

Scene Recognition operates in [Intelligent Auto] mode and [Superior Auto] mode.
This function allows the product to automatically recognize the shooting conditions and shoot the image.

Scene Recognition:

Icons and guides such as (Portrait), (Infant), (Night Portrait), (Night Scene), (Backlight Portrait), (Backlight), (Landscape), (Macro), (Spotlight), (Low Light), (Night Scene using a tripod) or (Hand-held Twilight) are displayed.

Image processing:

Cont. Shooting, Slow Sync., Auto HDR, Daylight Sync., Slow Shutter, Hand-held Twilight

Note

- When [Smile/Face Detect.] is set to [Off], the [Portrait], [Backlight Portrait], [Night Portrait] and [Infant] scenes are not recognized.

---

[35] How to Use | Shooting | Selecting a shooting mode

The advantages of automatic shooting

In [Superior Auto] mode, the product shoots with higher quality than [Intelligent Auto] mode and performs composite shooting as necessary.
In [Program Auto] mode, you can shoot after adjusting various functions, such as white balance, ISO, etc.

(Intelligent Auto):
Select this mode when you want the camera automatically recognize the scene.
(Superior Auto):
Select this mode to shoot scenes under difficult circumstances, such as when it is dark or the subjects are back-lit. Select this mode to shoot a higher quality image than that provided by (Intelligent Auto).
P (Program Auto):
Select this mode to shoot with various functions other than the exposure (shutter speed and aperture) adjusted.

Note

- In [Intelligent Auto] mode, you may not be able to shoot dark scenes or back-lit subjects clearly.
- In [Superior Auto] mode, the recording process takes longer, since the product creates a composite image.

---

[36] How to Use | Shooting | Selecting a shooting mode

Program Auto

Allows you to shoot with the exposure adjusted automatically (both the shutter speed and the aperture value).
You can set shooting functions such as [ISO].

1. Set the mode dial to P (Program Auto).
2. Set the shooting functions to your desired settings.
3. Adjust the focus and shoot the subject.

Program Shift

You can change the shutter speed and aperture (F-value) combination by rotating the front/rear dial, without changing the appropriate exposure that is set by this product. This function is available when you do not use the flash.

- “P” on the screen changes to “P*” when you turn the front/rear dial.
- To cancel program shift, set the shooting mode to other than [Program Auto], or turn off the camera.

Note

- According to the brightness of the environment, the program shift may not be used.
- Set the shooting mode to another one than “P” or turn off the power to cancel the setting you made.
- When the brightness changes, the aperture (F value) and shutter speed also change while maintaining the shift amount.

Sweep Panorama

Allows you to create a single panoramic image from multiple images shot while panning the camera.

1. Set the mode dial to (Sweep Panorama).
2. Point the camera at the subject.
3. While pressing the shutter button halfway down, aim the camera at one end of the desired panoramic composition.

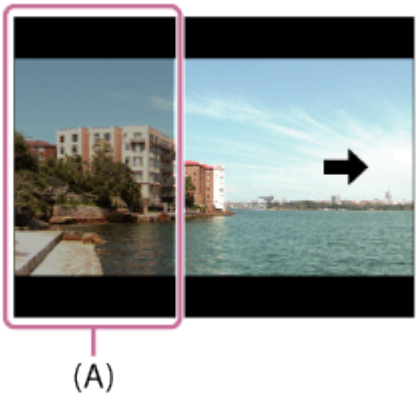

(A) This part will not be shot.

4. Press the shutter button fully down.

5. Pan the camera to the end of the guide in the direction of the arrow on the monitor.

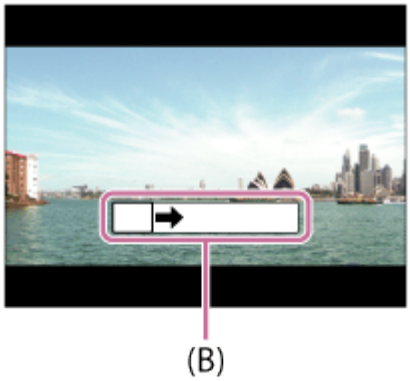

(B) Guidance bar

Note

- If the entire angle of the panoramic shot is not achieved within the set time, a gray area occurs in the composite image. If this happens, move the product faster to record the full panoramic image.
- When [Wide] is selected for [Panorama: Size], the entire angle of the panoramic shot may not be achieved within the given time. If this happens, try shooting after changing [Panorama: Size] to [Standard].
- Since several images are stitched together, the stitched part may not be recorded smoothly in some cases.
- The images may be blurred in dark scenes.
- When a light source such as a fluorescent light flickers, the brightness and color of a stitched image may not be consistent.
- When the whole angle of panoramic shooting and the AE/AF locked angle are very different in brightness and focus, the shooting may not be successful. If this happens, change AE/AF locked angle and shoot again.
- The following situations are not suited for shooting Sweep Panorama:

- Moving subjects.
- Subjects that are too close to the product.
- Subjects with continuously similar patterns, such as the sky, beach, or a lawn.
- Subjects with constant change such as waves or water falls.
- Subjects with brightness widely different from its surroundings such as the sun or a light bulb.

- The Sweep Panorama shooting may be interrupted in the following situations.
  - When the camera is panned too fast or too slow.
  - The subject is too blurry.

Hint

- You can turn the front dial on the shooting screen to select the shooting direction.

Scene Selection

Allows you to shoot with preset settings according to the scene.

1. Set the mode dial to SCN (Scene Selection).
2. MENU → (Camera Settings) → [Scene Selection] → desired mode.
   - When [Mode Dial Guide] is set to [On], you can select the desired settings after you have changed the position of the mode dial.

Menu item details

Portrait:
Blurs background and sharpens the subject. Accentuates the skin tones softly.

Sports Action:
Shoots a moving subject at a fast shutter speed so that the subject looks as if it is standing still. The product shoots images continuously while the shutter button is pressed.

Macro:

Shoots close-ups of the subjects, such as flowers, insects, food, or small items.

Landscape:

Shoots the entire range of a scenery in sharp focus with vivid colors.

Sunset:

Shoots the red of the sunset beautifully.

Night Scene:

Shoots night scenes without losing the dark atmosphere.

Hand-held Twilight:

Shoots night scenes with less noise and blur without using a tripod. A burst of shots are taken, and image processing is applied to reduce subject blur, camera-shake, and noise.

Night Portrait:

Shoots night scene portraits using the flash.

Anti Motion Blur:

Allows you to shoot indoor shots without using the flash and reduces subject blur. The product shoots burst images and combines them to create the image, reducing subject blur and noise.

Note

- In the [Night Scene] and [Night Portrait] modes, the shutter speed is slower, so use of a tripod is recommended to prevent the image from blurring.
- In the [Hand-held Twilight] or [Anti Motion Blur] mode, the shutter clicks 4 times and an image is recorded.
- If you select [Hand-held Twilight] or [Anti Motion Blur] with [RAW] or [RAW & JPEG], the image quality becomes [Fine] temporarily.
- Reducing blur is less effective even in [Hand-held Twilight] or [Anti Motion Blur] when shooting the following subjects:
  - Subjects with erratic movement.
  - Subjects that are too close to the product.
  - Subjects with continuously similar patterns, such as the sky, a beach, or a lawn.
  - Subjects with constant change such as waves or water falls.
- In the case of [Hand-held Twilight] or [Anti Motion Blur], block noise may occur when using a light source that flickers, such as fluorescent lighting.
- The minimum distance that you can come close to a subject does not change even if you select [Macro]. For the minimum in-focus range, refer to the minimum distance of the lens attached to the product.

Hint

- To change the scene, rotate the front dial on the shooting screen and select a new scene.

Shutter Priority

You can express the movement of a moving subject in various ways by adjusting the shutter speed, for example, at the instant of the movement with high speed shutter, or as a trailing image with low speed shutter. The shutter speed can be changed while recording movies.

1. Set the mode dial to S (Shutter Priority).
2. Select the desired value by turning the front dial.
3. Adjust the focus and shoot the subject.
   The aperture is automatically adjusted to obtain proper exposure.

Note

- If proper exposure cannot be obtained after setup, the aperture value on the shooting screen blinks. Although you can shoot as it is, resetting is recommended.
- Use a tripod to prevent blurring when you use a slow shutter speed.
- The (SteadyShot warning) indicator does not appear in shutter speed priority mode.
- When the shutter speed is 1 second(s) or longer, noise reduction will be done after shooting for the same amount of time that the shutter was open. However, you cannot shoot any more while noise reduction is in progress.
- The brightness of the image on the monitor may differ from the actual image being shot.

Hint

- When a faster shutter speed is used, moving subjects, such as a running person, cars, or sea spray come out as if they are frozen in their movements. When a slower shutter speed is used, a trailing image of the movement of the subject is captured to create a more natural and dynamic image.

Aperture Priority

You can shoot by adjusting the aperture and changing the range in focus, or by defocusing the background. The aperture value can be changed while recording movies.

1. Set the mode dial to A (Aperture Priority).
2. Select the desired value by turning the front dial.
   - Smaller F-value: The subject is in focus, but objects in front of and beyond the subject are blurred.
     Larger F-value: The subject and its foreground and background are all in focus.

3. Adjust the focus and shoot the subject.
   The shutter speed is automatically adjusted to obtain proper exposure.

Note

- If proper exposure cannot be obtained after setup, the shutter speed on the shooting screen blinks. Although you can shoot as it is, resetting is recommended.
- The brightness of the image on the screen may differ from the actual image being shot.

Hint

- Smaller F-value (opening the aperture) narrows the range that is in focus. This allows you to put the subject in sharp focus and blur objects in front of and beyond the subject (depth of field becomes shallower). Larger F-value (narrowing down the aperture) widens the range that is in focus. This allows you to shoot the depth of the scenery (depth of field becomes deeper).

Manual Exposure

You can shoot with the desired exposure setting by adjusting both the shutter speed and aperture. The shutter speed and the aperture value can be changed while recording movies.

1. Set the mode dial to M (Manual Exposure).

2. Select the desired aperture value by turning the front dial.
   Select the desired shutter speed by turning the rear dial.
   When [ISO] is set to other than[ISO AUTO], use MM (Metered Manual) to check the exposure value.
   Toward +: Images become brighter.
   Toward - : Images become darker.
   0: Appropriate exposure analyzed by the product

3. Adjust the focus and shoot the subject.

Note

- When [ISO] is set to [ISO AUTO], the ISO value automatically changes to achieve the appropriate exposure using the aperture value and shutter speed you have set. If the aperture value and shutter speed you have set are not suitable for appropriate exposure, the ISO value indicator will blink.

- The Metered Manual indicator does not appear when [ISO] is set to [ISO AUTO].
- When the amount of ambient light exceeds the metering range of the Metered Manual, the Metered Manual indicator flashes.
- The (SteadyShot warning) indicator does not appear in manual exposure mode.
- The brightness of the image on the monitor may differ from the actual image being shot.

Hint

- By setting the AF/MF/AEL switch lever to AEL and rotating the front/rear dial while pressing the AEL button, you can change the shutter speed and aperture (F-value) combination without changing the set exposure value. (Manual shift)

BULB

You can shoot a trailing image of the movement of a subject with long exposure.
BULB is suitable for shooting trails of light, such as fireworks.

1. Set the mode dial to M (Manual Exposure).
2. Turn the rear dial clockwise until [BULB] is indicated.
3. Select the aperture value (F value) using the front dial.
4. Press the shutter button halfway down to adjust the focus.
5. Press and hold the shutter button for the duration of the shooting.
   As long as the shutter button is pressed, the shutter remains open.

Note

- Since the shutter speed becomes slow and the camera-shake tends to occur more easily, it is recommended that you use a tripod.
- The longer the exposure time, the more noise will be visible on the image.
- After shooting, noise reduction will be done for the same amount of time that the shutter was open. However, you cannot shoot any more while noise reduction is in progress.
- You cannot set the shutter speed to [BULB] in the following situations:
  - When the [Smile Shutter] function is activated.
  - When the [Auto HDR] function is activated.
  - When [Picture Effect] is set to [HDR Painting] or [Rich-tone Mono.].
  - When the [Multi Frame NR] function is activated.
  - When the [Drive Mode] function is set to [Cont. Shooting], [Cont. Bracket], [Spd Priority Cont.] or [Self-timer(Cont)].

If you use the above functions when the shutter speed is set to [BULB], the shutter speed is temporarily set to 30 seconds.

Hint

- Images shot in [BULB] mode tend to be blurry. We recommend that you use a tripod or a remote commander (sold separately) that has a shutter button lock function.

Memory recall

Allows you to shoot an image after recalling often-used modes or camera settings registered in advance.

1. Set the mode dial to 1 or 2 (Memory recall).
2. Press the left/right side of the control wheel or turn the control wheel to select the desired number, then press ● on the center.

Hint

- To recall the registered settings from the memory card, select MENU → (Camera Settings) → [Memory recall].

Note

- Register shooting settings in advance by[Memory].
- If you set [Memory recall] after completing the shooting settings, the registered settings are given priority and the original settings may become invalid. Check the indicators on the screen before shooting.

Movie

You can adjust the shutter speed or aperture value to your desired settings for recording movies. You can also check the image angle before shooting.

1. Set the mode dial to (Movie).
2. MENU → (Camera Settings) → [Movie] → desired setting.

- When [Mode Dial Guide] is set to [On], you can select the desired settings after you have changed the position of the mode dial.

3. Press the MOVIE button to start recording.
   - Press the MOVIE button again to stop recording.

Menu item details

Program Auto:
Allows you to shoot with the exposure (both the shutter speed and the aperture value) adjusted automatically. Other settings can be adjusted manually and the settings are retained.
Aperture Priority:
Allows you to shoot after adjusting the aperture value manually.
Shutter Priority:
Allows you to shoot after adjusting the shutter speed manually.
Manual Exposure:
Allows you to shoot after adjusting the exposure (both the shutter speed and the aperture value) manually.

- (Aperture Priority), (Shutter Priority) and (Manual Exposure) are available only when the focus mode is set to "MF" (Manual Focus).

Zoom

When a zoom lens is mounted, you can enlarge images by turning the zoom ring of the lens.

1. Turn the zoom ring of the zoom lens to enlarge subjects.
   - When a Power zoom lens is mounted, move the zoom lever of the zoom lens to enlarge subjects.

About other [Zoom] functions than the optical zoom

When you set [Zoom Setting] to something other than [Optical zoom only], you can use other zoom functions than the optical zoom.
When a Power zoom lens is mounted:
If the zoom range of the optical zoom is exceeded when you operate the zoom lever or zoom ring, the camera automatically switches over to another zoom function than the optical

zoom.

When a lens other than a Power zoom lens is mounted:

MENU → (Camera Settings) → [Zoom] → desired value.

The zoom features available with this product

The zoom feature of the product provides a higher magnification zoom by combining various zoom features. The icon displayed on the screen changes, according to the selected zoom feature.

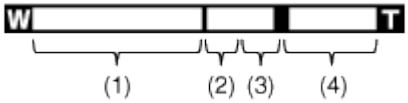

(1) Optical zoom range

Zoom images in the zoom range of a lens.

When a Power zoom lens is mounted, the zoom bar of the optical zoom range is displayed.

When a lens other than a Power zoom lens is mounted, the zoom bar of optical zoom range is not displayed.

(2) Smart Zoom range ( )

Zoom images without causing the original quality to deteriorate by partially cropping an image (only when the image size is [M] or [S]).

(3) Clear Image Zoom range ( )

Zoom images using an image process with less deterioration. Set[Zoom Setting] to [On:ClearImage Zoom] or [On Digital Zoom] first.

(4) Digital Zoom range ( )

You can magnify images using an image process. When you select [On Digital Zoom] for [Zoom Setting], you can use this zoom function.

Note

- The default setting for the [Zoom Setting] is [Optical zoom only].
- The default setting for [Image Size] is [L]. To use the smart zoom change [Image Size] to [M] or [S].
- Zoom functions other than the optical zoom are not available when shooting in the following situations:
  - [Sweep Panorama]
  - [Smile/Face Detect.] is set to [Smile Shutter]
  - [Quality] is set to [RAW] or [RAW & JPEG]
  - [Record Setting] is set to [120p 50M]/[100p 50M]

- You cannot use the Smart Zoom function with movies.
- When a power zoom lens is mounted, you cannot use [Zoom] under MENU. If you enlarge image past the optical zoom range, the product automatically switches to another [Zoom] function than the optical zoom.
- When you use a zoom function other than the optical zoom, [Metering Mode] is fixed to [Multi].
- When you use another zoom function than the optical zoom, the following functions are not available:
  - [Face Detection]
  - [Lock-on AF]
  - [Auto Obj. Framing]
- To use another zoom function than the optical zoom for movies, assign [Zoom] to the desired button using [Custom Key Settings].

Zoom Setting

You can select the zoom setting of the product.

1. MENU → (Custom Settings) → [Zoom Setting] → desired setting.

Menu item details

Optical zoom only (default setting):
Optical zoom is activated. You can use the Smart Zoom function if you set [Image Size] to [M] or [S].
On:ClearImage Zoom:
Even if the zoom range of the optical zoom is exceeded, the product magnifies images within the range in which image quality does not deteriorate significantly.
On Digital Zoom:
When the zoom range of the[Clear Image Zoom] is exceeded, the product magnifies images to the largest scale. However, the image quality will deteriorate.

Note

- Set [Optical zoom only] if you want to magnify images within the range in which image quality does not deteriorate.

About zoom scale

The zoom scale that is used in combination with the zoom of the lens changes according to the selected image size.

When [Aspect Ratio] is [3:2]

When shooting full-size images
[Zoom Setting] : [Optical zoom only (including smart zoom)]
[Image Size] : L -×, M 1.5×, S 2×

[Zoom Setting] : [On:ClearImage Zoom]
[Image Size] : L 2×, M 3.1×, S 4×

[Zoom Setting] : [On Digital Zoom]
[Image Size] : L 4×, M 6.1×, S 8×

When shooting APS-C size images
[Zoom Setting] : [Optical zoom only (including smart zoom)]
[Image Size] : L -×, M 1.3×, S 2×

[Zoom Setting] : [On:ClearImage Zoom]
[Image Size] : L 2×, M 2.6×, S 4×

[Zoom Setting] : [On Digital Zoom]
[Image Size] : L 4×, M 5.2×, S 8×

Zoom Ring Rotate

Assigns zoom in (T) or zoom out (W) functions to the zoom ring rotation direction. Available only with power zoom lenses that support this function.

1. MENU → (Custom Settings) → [Zoom Ring Rotate] → desired setting.

Menu item details

Left(W)/Right(T) (default setting):
Assigns zoom out (W) function to left-handed rotation and zoom-in (T) function to right-handed rotation.

Right(W)/Left(T):

Assigns zoom in (T) function to left-handed rotation and zoom-out (W) function to right-handed rotation.

Note

- This function is available only with a power zoom lens whose operation direction is variable.

Using flash (sold separately)

In dark environments, use the flash to light up the subject while shooting and to prevent camera-shake. When shooting against the sun, use the flash to lighten the image of the backlit subject.

1. Attach the flash to the product (sold separately).

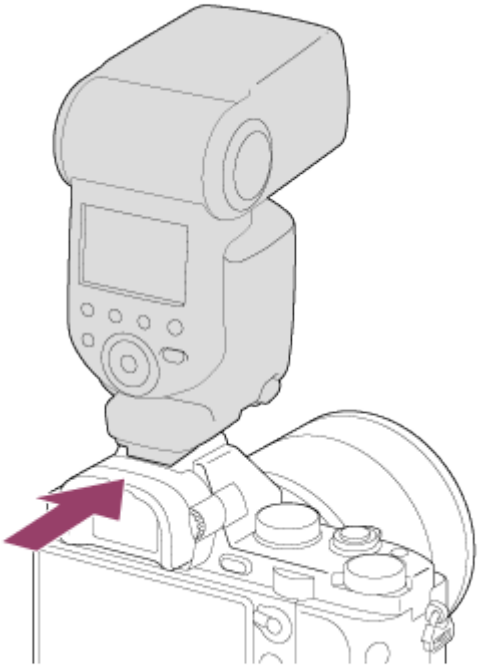

2. Press the shutter button fully down.

Note

- You cannot use the flash when recording movies.
- While charging the flash, flashes. After charging is completed, the flashing icon will light up.
- Do not use a commercially available flash with high-voltage synchro terminals or with reverse polarity.

The corners of a recorded image may be shaded, depending on the lens.

Flash Mode

You can set the flash mode.

1. MENU → (Camera Settings) → [Flash Mode] → desired setting.

Menu item details

Flash Off:
The flash does not operate.

Autoflash:
The flash works in dark environments or when shooting towards bright light.

Fill-flash (default setting):
The flash works every time you trigger the shutter.

Slow Sync.:
The flash works every time you trigger the shutter. Slow sync shooting allows you to shoot a clear image of both the subject and the background by slowing the shutter speed.

Rear Sync.:
The flash works right before the exposure is completed every time you trigger the shutter. Rear sync shooting allows you to shoot a natural image of the trail of a moving subject such as a moving car or a walking person.

Wireless:
When using a wireless flash, the shading effect provides a more 3D appearance to a subject than when using an attached flash.
This mode is effective when you attach a remote control-compatible external flash (sold separately) to the product, and shoot with a wireless flash (sold separately), placed away from the product.

Note

- The default setting depends on the shooting mode.
- Available flash mode depends on the shooting mode.

Flash Comp.

Adjusts the amount of flash light in a range of –3.0 EV to +3.0 EV.
Flash compensation changes the amount of flash light only. Exposure compensation changes the amount of flash light along with the change of the shutter speed and aperture.

1. MENU → (Camera Settings) → [Flash Comp.] → desired setting.
   Selecting higher values (+ side) makes the flash level higher, and lower values (– side) makes the flash level lower.

Note

- The higher flash effect may not be visible due to the limited amount of flash light available, if the subject is outside the maximum range of the flash. If the subject is very close, the lower flash effect may not be visible.

FEL Lock

The flash level is automatically adjusted so that the subject gets the optimum exposure during normal flash shooting. You can also set the flash exposure in advance.
FEL: Flash Exposure Level

1. Center the subject on which FEL is to be locked, and adjust the focus.
2. Press the button to which [FEL Lock toggle] is registered, and set the flash amount.
   - A pre-flash flashes.
   - (FEL lock) flashes.
   - Select MENU → (Custom Settings) → [Custom Key Settings] → desired button → [FEL Lock toggle] to register the function in advance.
3. Adjust the composition and shoot the image.
   - When you want to release the FEL lock, press the button to which [FEL Lock toggle] is registered again.

Flashes that support FEL lock

- HVL-F60M and HVL-F43M can be used as clip-ons, off-camera connected by a cable, and

for wireless flash shooting (controller/remote).

- HVL-F20M can be used as a clip-on, off-camera connected with a cable, and for wireless flash shooting (controller).

Note

- The FEL lock cannot be set when a flash is not attached.
- If a flash that does not support the FEL lock is attached, an error message is displayed.
- When both AE and FEL lock are fixed, ⚡L✱ flashes.

Hint

- By setting [FEL Lock hold], you can hold the setting while the button is pressed down. Also, by setting [FEL Lock/AEL hold] and [FEL Lock/AEL tggle.], you can shoot images with the AE locked in the following situations.
  - When [Flash Mode] is set to [Flash Off] or [Autoflash].
  - When the flash cannot go off.
  - When using an external flash that is set to manual flash mode.

Switching the screen display (Shooting)

You can change the display contents on the screen.

1. Press the DISP (Display Setting) button.
   Each time you press the DISP button, the recording information display changes as follows:
   Graphic Display → Display All Info. → No Disp. Info. → Histogram → Level → For viewfinder* → Graphic Display

   Graphic Display

   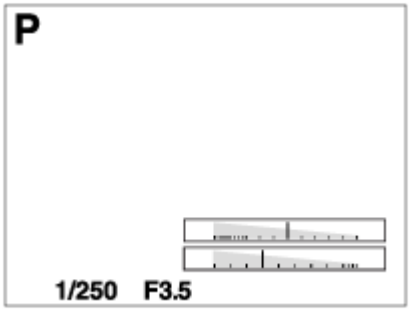

   Display All Info.

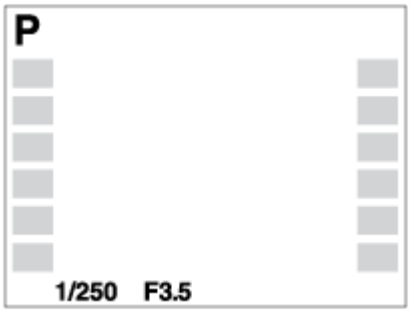

No Disp. Info.

Histogram

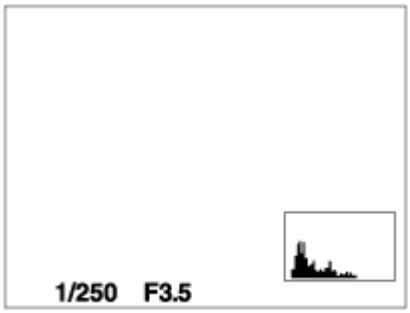

Level

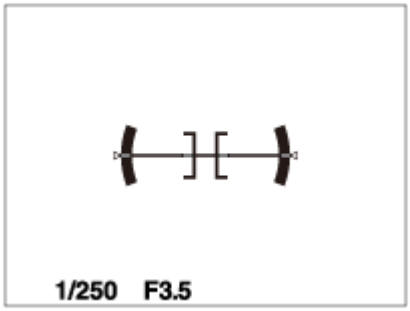

For viewfinder*

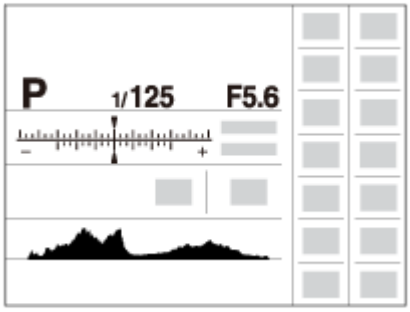

* [For viewfinder] is displayed only on the screen.

Some display modes are not available in the default settings.

To change the display modes, press MENU → ⚙ (Custom Settings) → [DISP Button] and change the setting.

Note

- Histogram is not displayed during panorama shooting.
- In movie mode, [For viewfinder] cannot be displayed.

Hint

- You can select different settings for both the viewfinder and the monitor. Look through the viewfinder to set the display settings for the viewfinder.

DISP Button (Finder)

Allows you to set the screen display modes that can be selected for the viewfinder using DISP (Display Setting) in shooting mode.

1. MENU → ⚙ (Custom Settings) → [DISP Button] → [Finder] → desired setting → [Enter].
   The items marked with ✓ are available.

Menu item details

Graphic Display:

Shows basic shooting information. Graphically shows the shutter speed and aperture value.

Display All Info.:

Shows recording information.

No Disp. Info.:

Does not show recording information.

Histogram:

Displays the luminance distribution graphically.

Level:

Indicates whether the product is level in both the horizontal and front-back directions. When the product is level in both directions, the indicator turns to green.

DISP Button (Monitor)

Allows you to set the screen display modes that can be selected for the monitor using DISP (Display Setting) in shooting mode.

1. MENU → (Custom Settings) → [DISP Button] → [Monitor] → desired setting → [Enter].
   The items marked with are available.

Menu item details

Graphic Display:
Shows basic shooting information. Graphically shows the shutter speed and aperture value.

Display All Info.:
Shows recording information.

No Disp. Info.:
Does not show recording information.

Histogram:
Displays the luminance distribution graphically.

Level:
Indicates whether the product is level in both the horizontal and front-back directions. When the product is level in both directions, the indicator turns to green.

For viewfinder:
Displays information suited for shooting with the viewfinder.

Image Size (still image)

The larger the image size, the more detail will be reproduced when the image is printed on large-format paper. The smaller the image size, the more images can be recorded.

1. MENU → (Camera Settings) → [Image Size] → desired setting.

Menu item details

Image size when [Aspect Ratio] is 3:2
L: 12M 4240×2832 pixels

M: 5.1M 2768×1848 pixels

S: 3.0M 2128×1416 pixels

Image size when [Aspect Ratio] is 16:9

L: 10M 4240×2384 pixels

M: 4.3M 2768×1560 pixels

S: 2.6M 2128×1200 pixels

When [APS-C Size Capture] is [On]

Image size when [Aspect Ratio] is 3:2

L: 5.1M 2768×1848 pixels

M: 3.0M 2128×1416 pixels

S: 1.3M 1376×920 pixels

Image size when [Aspect Ratio] is 16:9

L: 4.3M 2768×1560 pixels

M: 2.6M 2128×1200 pixels

S: 1.1M 1376×776 pixels

Note

- When [Quality] is set to [RAW] or [RAW & JPEG], the image size for RAW images corresponds to [L].

Aspect Ratio (still image)

Sets the aspect ratio of still images.

1. MENU → (Camera Settings) → [Aspect Ratio] → desired setting.

Menu item details

3:2 (default setting):

Suitable for standard prints.

16:9:

For viewing on a high-definition TV.

Quality (still image)

Selects the compression format of still images.

1. MENU → (Camera Settings) → [Quality] → desired setting.

Menu item details

RAW:
File format: RAW (Records using the RAW compression format.)
Digital processing is not performed on this file format. Select this format to process images on a computer for professional purposes.

- The image size is fixed to the maximum size. The image size is not displayed on the screen.

RAW & JPEG:
File format: RAW (Records using the RAW compression format.) + JPEG
A RAW image and a JPEG image are created at the same time. This is suitable when you need 2 image files, a JPEG for viewing, and a RAW for editing.
The JPEG image quality is set to [Fine].
Extra fine:
File format: JPEG
The image is compressed in the JPEG format and recorded using a higher quality than with [Fine].
Fine (default setting):
File format: JPEG
The image is compressed in the JPEG format when recorded.
Standard:
File format: JPEG
The image is compressed in the JPEG format when recorded. Since the compression rate of [Standard] is higher than that of [Fine], the file size of [Standard] is smaller than that of [Fine]. This will allow more files to be recorded on 1 memory card, but the image quality will be lower.

Note

- If images are not to be modified using your computer, we recommend that you record images in JPEG format.
- You cannot add DPOF (print order) registration to RAW format images.

Panorama: Size

Sets the image size when shooting panoramic images. The image size varies depending on the [Panorama: Direction] setting.

1. MENU → (Camera Settings) → [Panorama: Size] → desired setting.

Menu item details

When [Panorama: Direction] is [Up] or [Down]
Standard: 3872×2160
Wide: 5536×2160

When [Panorama: Direction] is [Left] or [Right]
Standard: 8192×1856
Wide: 12416×1856

Panorama: Direction

Sets the direction to pan the camera when shooting panoramic images.

1. MENU → (Camera Settings) → [Panorama: Direction] → desired setting.

Menu item details

Right (default setting):
Pan the camera from the left to the right.
Left:
Pan the camera from the right to the left.
Up:
Pan the camera from the bottom to the top.
Down:
Pan the camera from the top to the bottom.

Focus Mode

Selects the focus method to suit the movement of the subject.

1. MENU → (Camera Settings) → [Focus Mode] → desired setting.

Menu item details

AF-S (Single-shot AF) (default setting):
The product locks the focus when the focus adjustment is achieved. Use [Single-shot AF] when the subject is motionless.
AF-C (Continuous AF):
The product continues to focus while the shutter button is pressed and held halfway down. Use this when the subject is in motion.
DMF (DMF):
Allows you to use manual focus and auto focus in combination.
MF (Manual Focus):
Adjusts the focus manually.

Note

- If the subject is too close, the image may show any dust or fingerprints on the lens. Wipe the lens with a soft cloth, etc.
- When [Focus Mode] is set to [Continuous AF], the beep does not sound when focus is achieved.
- Depending on the lens you use, the angle of view may change little by little while focusing. This change in angle of view may be more evident when the focus mode is set to [Continuous AF] (AF-C) (including [Sports Action] in the Scene Selection function). This does not affect the actual recorded images.
  Consult your Sony dealer or local authorized Sony service facility on compatible lenses.

Focus Area

Selects the focusing area. Use this function when it is difficult to get the proper focus in auto focus mode.

1. MENU → (Camera Settings) → [Focus Area] → desired setting.

Menu item details

Wide:
Focuses automatically on a subject in all ranges of the image.
When you press the shutter button halfway down in still image shooting mode, a green frame

is displayed around the area that is in focus.

Zone:
Select a zone on the monitor on which to focus. A zone consists of nine focus areas, and the product automatically selects a focus area on which to focus.

Center:
Focuses automatically on a subject in the center of the image. When used together with the AF lock function, you can compose the image you want.

Flexible Spot:
Allows you to move the AF range frame to the desired point on the screen and focus on an extremely small subject in a narrow area.

On the Flexible Spot shooting screen, you can change the size of the AF range finder frame by rotating the control wheel.

Lock-on AF:
When the shutter button is pressed and held halfway down, the product tracks the subject within the selected autofocus area. Point the cursor to [Lock-on AF] on the [Focus Area] setting screen, then select the desired tracking start area using the left/right sides of the control wheel. You can move the tracking start area to the desired point by designating the area to be the flexible spot.

On the Flexible Spot shooting screen, you can change the size of the AF range finder frame by rotating the control wheel.

Center Lock-on AF

When you press the center button, the camera detects the subject positioned in the center of the screen and continues to track the subject.

1. MENU → (Camera Settings) → [Center Lock-on AF] → [On]
2. Align the target frame (A) over the subject and press in the center of the control wheel.
   Press again to stop tracking.

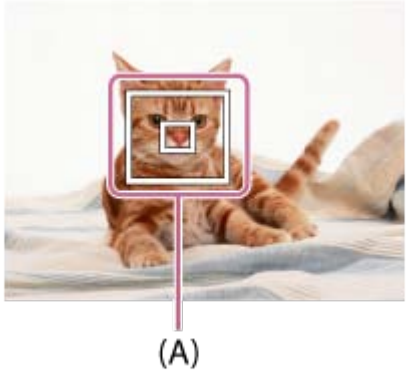

3. Press the shutter button fully down to shoot the image.

Note

- [Center Lock-on AF] may not function very well in the following situations:
  - The subject is moving too quickly.
  - The subject is too small, or too large.
  - The contrast between the subject and the background is poor.
  - It is dark.
  - The ambient light changes.
- Lock-on AF does not work in the following situations:
  - In [Sweep Panorama] mode
  - When [Scene Selection] is set to [Hand-held Twilight] or [Anti Motion Blur]
  - When shooting in Manual Focus mode
  - When using the digital zoom
- When the subject to be tracked disappears from the screen, Lock-on AF is released.
- When [Center Lock-on AF] is set to [On], the camera may not be able to resume tracking for a while after it loses the track of the subject.

Focus-lock

Shoots images with the focus locked on the desired subject in auto focus mode.

1. MENU → (Camera Settings) → [Focus Mode] → [Single-shot AF].
2. Place the subject within the AF area and press the shutter button halfway down.
   The focus is locked.
3. Keep pressing the shutter button halfway down, and place the subject back in the original position to re-compose the shot.

4. Press the shutter button down fully to take the picture.

[66] How to Use │ Using shooting functions │ Adjusting the focus

Manual Focus

When it is difficult to get the proper focus in autofocus mode, you can adjust the focus manually.

1. MENU → (Camera Settings) → [Focus Mode] → [Manual Focus].
2. Rotate the focus ring to achieve sharp focus.

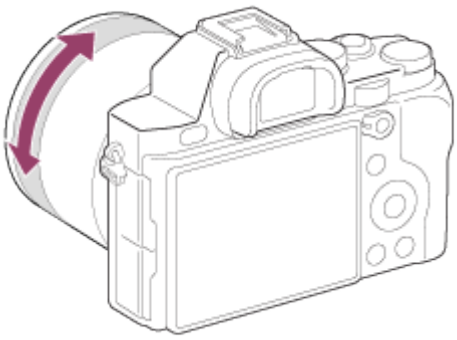

- When you rotate the focus ring, the focus distance is displayed on the screen.

3. Press the shutter button fully down to take the picture.

[67] How to Use │ Using shooting functions │ Adjusting the focus

Direct manual focus (DMF)

You can make fine adjustments manually after the focus is locked.
You can quickly focus on a subject rather than using the manual focus from the beginning.
This is convenient in cases such as macro shooting.

1. MENU → (Camera Settings) → [Focus Mode] → [DMF].
2. Press the shutter button halfway down to focus automatically.
3. Keep the shutter button halfway down, rotate the focusing ring to achieve a sharper

focus.

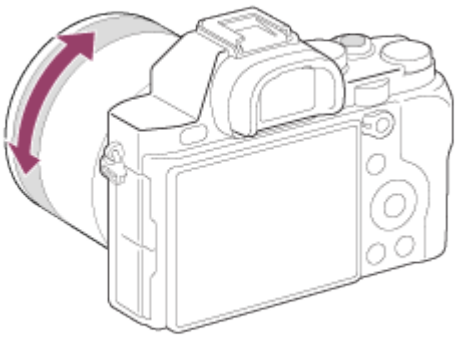

- When you rotate the focus ring, the focus distance is displayed on the screen.

4. Press the shutter button fully down to shoot an image.

MF Assist (still image)

Enlarges the image on the screen automatically to make manual focusing easier. This works in Manual Focus or Direct Manual Focus shooting.

1. MENU → (Custom Settings) → [MF Assist] → [On].
2. Turn the focus ring to adjust the focus.

- The image is enlarged. You can magnify images further by pressing on the center of the control wheel.

Note

- You cannot use [MF Assist] when shooting movies.
- [MF Assist] is available only when E-mount lens is attached.

Hint

- You can set the duration for which an image is to be magnified by selectingMENU → (Custom Settings) → [Focus Magnif. Time].

Focus Magnifier

You can check the focus by enlarging the image before shooting.

1. MENU → (Camera Settings) → [Focus Magnifier].
2. Press on the center of the control wheel to enlarge the image and select the position you want to enlarge using up/down/left/right side of the control wheel.
3. Confirm the focus.
4. Press the shutter button fully down to shoot the image.

Hint

- Each time you press in the center, the magnifier scaling changes.
- When focusing manually, you can adjust the focus while an image is magnified.
- The [Focus Magnifier] function will be released when the shutter button is pressed halfway.
- You can record images while an image is enlarged, but the product records a full-display image.
- The [Focus Magnifier] function will be released after shooting.
- You can set the duration for which an image is to be magnified by selectingMENU → (Custom Settings) → [Focus Magnif. Time].

Focus Magnif. Time

Set the duration for which an image is to be magnified using the [MF Assist] or [Focus Magnifier] function.

1. MENU → (Custom Settings) → [Focus Magnif. Time] → desired setting.

Menu item details

2 Sec (default setting):

Magnifies the images for 2 seconds.

5 Sec:

Magnifies the images for 5 seconds.

No Limit:

Magnifies the images until you press the shutter button.

[71] How to Use | Using shooting functions | Adjusting the focus

Peaking Level

Enhances the outline of in-focus ranges using a specific color in Manual Focus or Direct Manual Focus shooting. This function allows you to confirm the focus easily.

1. MENU → ⚙ (Custom Settings) → [Peaking Level] → desired setting.

Menu item details

High:

Sets the peaking level to high.

Mid:

Sets the peaking level to middle.

Low:

Sets the peaking level to low.

Off (default setting):

Does not use the peaking function.

Note

- Since the product determines that sharp areas are in focus, the effect of peaking differs, depending on the subject and shooting conditions.
- The outline of in-focus ranges is not enhanced when the product is connected using an HDMI cable.

[72] How to Use | Using shooting functions | Adjusting the focus

Peaking Color

Sets the color used for the peaking function in Manual Focus or Direct Manual Focus shooting.

1. MENU → ⚙ (Custom Settings) → [Peaking Color] → desired setting.

Menu item details

Red:
Enhances outlines in red.
Yellow:
Enhances outlines in yellow.
White (default setting):
Enhances outlines in white.

---

[73] How to Use | Using shooting functions | Adjusting the focus

Pre-AF (still image)

The product automatically adjusts focus before you press the shutter button halfway down.

1. MENU → (Custom Settings) → [Pre-AF] → desired setting.

Menu item details

On (default setting):
Adjusts focus before you press the shutter button halfway down.

Off:
Does not adjust focus before you press the shutter button halfway down.

Note

- [Pre-AF] is available only when an E-mount lens is mounted.

---

[74] How to Use | Using shooting functions | Adjusting the focus

Eye-Start AF (still image)

Sets whether or not to use autofocus when you look through an Electronic Viewfinder.

1. MENU → (Custom Settings) → [Eye-Start AF] → desired setting.

Menu item details

On:
Auto focusing starts when you look through the Electronic Viewfinder.
Off (default setting):
Auto focusing does not start when you look through the Electronic Viewfinder.

Hint

- [Eye-Start AF] is available when an A-mount lens and a Mount Adaptor (LA-EA2, LA-EA4) (sold separately) are attached.

---

[75] How to Use │ Using shooting functions │ Adjusting the focus

AF/MF control

You can easily switch the focusing mode from auto to manual and vice versa while shooting without changing your holding position.

1. Switch the AF/MF/AEL switch lever to the AF/MF position, then press the AF/MF button.

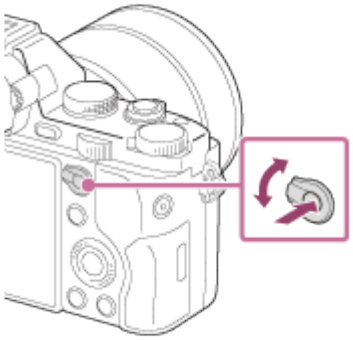

During auto focus:
Temporarily switches the focusing mode to manual. Adjust the focus while theAF/MF button is being held down.
During manual focus:
Temporarily switches the focusing mode to auto while the AF/MF button is held down, and locks the focus.

Hint

- If you select [AF/MF Ctrl Toggle] in [AF/MF Button] under [Custom Key Settings], the focusing mode remains switched even if you remove your finger from the button.

---

[76] How to Use │ Using shooting functions │ Adjusting the focus

AF Illuminator (still image)

The AF illuminator supplies fill light to focus more easily on a subject in dark surroundings. The red AF illuminator allows the product to focus easily when the shutter button is pressed

halfway, until the focus is locked.

1. MENU → (Camera Settings) → [AF Illuminator] → desired setting.

Menu item details

Auto (default setting):

Uses the AF illuminator.

Off:

Does not use the AF illuminator.

Note

- You cannot use [AF Illuminator] in the following situations:
  - In movie mode
  - In [Sweep Panorama] mode
  - When [Focus Mode] is set to [Continuous AF].
  - When [Scene Selection] is set to [Landscape], [Sports Action] or [Night Scene].
  - When a Mount Adaptor is attached.
- When [Focus Area] is set to [Wide] or [Zone], the AF range finder frame is indicated by a dotted line.
- The AF illuminator emits a very bright light. Although there is no health hazard, do not look directly into the AF illuminator at close range.

AF Micro Adj.

Allows you to adjust and register an autofocused position for each lens, when using an A-mount lens with the Mount Adaptor LA-EA2 or LA-EA4 (sold separately).

1. Select MENU → (Custom Settings) → [AF Micro Adj.].
2. Select [AF Adjustment Set.] → [On].
3. [amount] → desired value.
   - You can select a value between −20 and +20. Selecting a positive value shifts the autofocused position away from the product. Selecting a negative value shifts the autofocused position closer to the product.

Note

- It is recommended that you adjust the position under actual shooting conditions.
- When you attach a lens for which you have already registered a value, the registered value appears on the screen. [±0] appears for lenses for which a value has not yet been registered.
- If [−] is displayed as the value, then a total of 30 lenses have been registered and no new lens can be registered. To register a new lens, attach a lens for which the registration can be erased, and set its value to [±0], or reset the values of all the lenses using [Clear].
- If you perform [AF Micro Adj.] with lenses other than Sony, Minolta, or Konica-Minolta lenses, the registered settings for Sony, Minolta, or Konica-Minolta lenses may be affected. Do not perform [AF Micro Adj.] with an unsupported lens.
- You cannot set [AF Micro Adj.] individually for a Sony, Minolta, and Konica-Minolta lens of the same specification.

Focus Settings

Sets up the focus functions.

1. MENU → (Camera Settings) → [Focus Settings].
2. Perform settings using the front/rear dial or control wheel.

When the focus mode is set to [Autofocus]/[DMF]

Front dial: Moves the focus area frame up/down.
Rear dial: Moves the focus area frame right/left.
Control wheel: Selects the focus area.

When the focus mode is set to [Manual Focus]

You can set the area to be magnified when focusing manually.
Front dial: Moves the area to be magnified up/down.
Rear dial: Moves the area to be magnified right/left.
Control wheel: Moves the area to be magnified up/down.

Note

- You can move the focus area when [Focus Area] is set to the following:
  - [Zone]
  - [Flexible Spot]
  - [Lock-on AF: Zone]
  - [Lock-on AF: Flexible Spot]

[79] How to Use │ Using shooting functions │ Adjusting the focus

AF w/ shutter (still image)

Selects whether to focus automatically when you press the shutter button halfway down. Select [Off] to adjust the focus and the exposure separately.

1. MENU → (Custom Settings) → [AF w/ shutter] → desired setting.

Menu item details

On (default setting):

The auto focus operates when you press the shutter button halfway down.

Off:

The auto focus does not operate even if you press the shutter button halfway down.

Hint

- When [AF w/ shutter] is set to [Off], you can still use the [AF On] function.

[80] How to Use │ Using shooting functions │ Adjusting the focus

AF On

You can focus using any button instead of pressing the shutter button halfway down. The settings for [Focus Mode] will be applied.

1. Select the desired key and assign the [AF On] function to it using MENU → (Custom Settings) → [Custom Key Settings].
2. Press the key to which you have assigned the [AF On] function while auto-focus shooting.

[81] How to Use │ Using shooting functions │ Adjusting the focus

Eye AF

The camera focuses on the subject's eyes while you keep the button pressed.

1. MENU → ⚙ (Custom Settings) → [Custom Key Settings] → assign the [Eye AF] function to the desired button.
2. Point the camera at a person's face, and press the button to which you have assigned the [Eye AF] function.
3. Press the shutter button while pressing the button.

Note

- Depending on the circumstances, the camera may not be able to focus on the eyes. In such cases, the camera detects a face and focuses on the face.
- If the camera cannot detect a person's face, you cannot use [Eye AF].
- Depending on the circumstances, you cannot use [Eye AF], such as when [Focus Mode] is set to [Continuous AF] or [Manual Focus], etc.
- [Eye AF] may not function in the following situations:
  - When the person is wearing sunglasses.
  - When the front hair covers the person's eyes.
  - In low-light or back-lit conditions.
  - When the eyes are closed.
  - When the person is in the shade.
  - When the person is out of focus.

Hint

- When the camera focuses on the eyes and [Smile/Face Detect.] is set to [On], a detection frame is displayed on the face after it is displayed on the eyes. When [Smile/Face Detect.] is set to [Off], a detection frame is displayed on the eyes for a certain time.

Measuring the exact distance to the subject

The ⊖ mark shows the location of the image sensor*. When you measure the exact distance between the product and the subject, refer to the position of the horizontal line. The distance from the lens contact surface to the image sensor is about 18 mm (23/32 in.).

*The image sensor is the part that converts the light source to a digital signal.

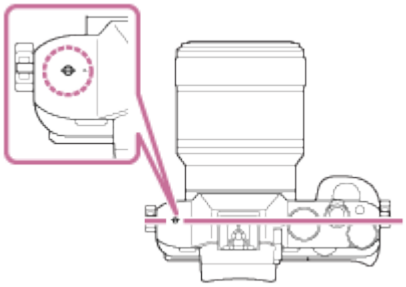

Note

- If the subject is closer than the minimum shooting distance of the lens, the focus cannot be confirmed. Make sure you put enough distance between the subject and the product.

---

[83] How to Use │ Using shooting functions │ Adjusting the exposure

Exposure Comp.

You can adjust the exposure under MENU when the exposure compensation dial is set to “0.” Based on the exposure value set by auto exposure, you can make the entire image brighter or darker if you adjust [Exposure Comp.] to the plus side or minus side, respectively (exposure compensation). Normally, exposure is set automatically (auto exposure).

1. MENU → (Camera Settings) → [Exposure Comp.] → desired setting.
   You can adjust the exposure in a range of –5.0EV to +5.0EV when the exposure compensation dial is set to “0.”

Note

- You can adjust the exposure in a range of –2.0 EV to +2.0 EV for movies.
- If you shoot a subject in extremely bright or dark conditions, or when you use the flash, you may not be able to get a satisfactory effect.
- Only a value between –3.0 EV and +3.0 EV with the equivalent image brightness appears on the screen when shooting. If you set an exposure beyond this range, the image brightness on the screen does not show the effect, but it will be reflected in the recorded image.
- When the exposure compensation dial is set to other than “0,” settings for the exposure compensation dial will be prioritized. For example, if you set [Exposure Comp.] to +5.0EV, but the exposure compensation dial is set to +2.0EV, the “+2.0EV” setting will be prioritized.
- When you set the exposure compensation dial to “0” from a setting other than “0,” the exposure value switches to “0” even if the exposure has been set to other settings.
- When you use [Manual Exposure], you can compensate for the exposure only when[ISO]

is set to [ISO AUTO].

[84] How to Use │ Using shooting functions │ Adjusting the exposure

Exposure compensation dial

Based on the exposure value set by auto exposure, you can make the entire image brighter or darker if you adjust [Exposure Comp.] to the plus side or minus side, respectively (exposure compensation). Normally, exposure is set automatically (auto exposure).

1. Turn the exposure compensation dial.

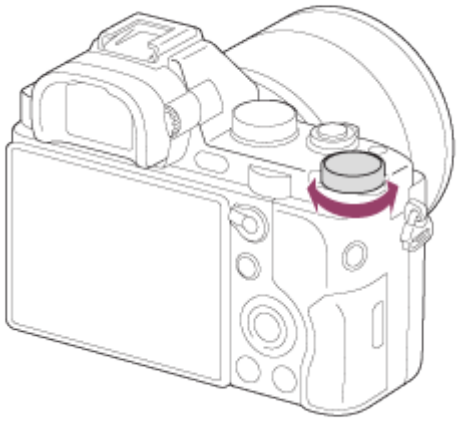

Note

- You can adjust the exposure in a range of −2.0 EV to +2.0 EV for movies.
- If you shoot a subject in extremely bright or dark conditions, or when you use the flash, you may not be able to get a satisfactory effect.
- When you use [Manual Exposure], you can compensate for the exposure only when[ISO] is set to [ISO AUTO].

[85] How to Use │ Using shooting functions │ Adjusting the exposure

Metering Mode

Selects the metering mode that sets which part of the screen to measure for determining the exposure.

1. MENU → (Camera Settings) → [Metering Mode] → desired setting.

Menu item details

Multi (default setting):
Measures light on each area after dividing the total area into multiple areas and determines the proper exposure of the entire screen (Multi-pattern metering).

Center:
Measures the average brightness of the entire screen, while emphasizing the central area of the screen (Center-weighted metering).

Spot:
Measures only the central area (Spot metering). This function is useful when the subject is backlit or when there is strong contrast between the subject and the background.

Note

- [Multi] is selected when using the following functions:
  - [Intelligent Auto]
  - [Superior Auto]
  - [Scene Selection]
  - Zoom functions other than optical zoom

AE lock

When the contrast between the subject and background is high, such as when shooting a backlit subject or a subject near a window, meter the light at a spot where the subject appears to have the appropriate brightness and lock the exposure before shooting. To reduce the brightness of the subject, meter the light at a spot brighter than the subject and lock the exposure of the entire screen. To make the subject brighter, meter the light at a spot darker than the subject and lock the exposure of the entire screen.

1. Adjust the focus on the spot at which the exposure is adjusted.

2. Switch the AF/MF/AEL switch lever to the AEL position, then press the AEL button.

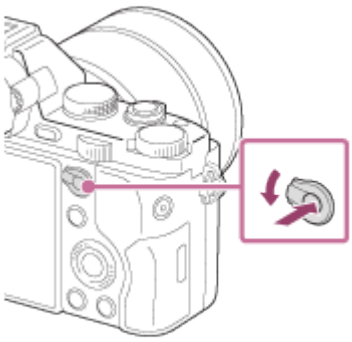

The exposure is locked, and ✱ (AE lock) lights up.

3. Keep pressing the AEL button and focus on the subject again, then shoot the picture.
   - Keep holding the AEL button down while taking a shot if you want to continue shooting with the fixed exposure. Release the button to reset the exposure.

Hint

- If you select the [AEL toggle] function in [Custom Key Settings], you can lock the exposure without holding down the AEL button.

AEL w/ shutter (still image)

Sets whether to fix the exposure when you press the shutter button halfway down.

1. MENU → (Custom Settings) → [AEL w/ shutter] → desired setting.

Menu item details

Auto (default setting):

Fixes the exposure after adjusting the focus automatically when you press the shutter button halfway down when [Focus Mode] is set to [Single-shot AF].

On:

Fixes the exposure when you press the shutter button halfway down.

Off:

Does not fix the exposure when you press the shutter button halfway down. Use this mode when you want to adjust focus and exposure separately.

The product keeps adjusting the exposure while shooting in [Cont. Shooting] or [Spd Priority Cont.] mode.

Note

- When [Focus Mode] is set to [Continuous AF] and [AEL w/ shutter] is [Off] or [Auto], the aperture is fixed at the moment you press the shutter button halfway. If the brightness changes drastically during continuous shooting, release your finger from the shutter button once, then press the shutter button halfway down again.
- Operation using the AEL button is prioritized over the [AEL w/ shutter] settings.

Exp.comp.set

Sets whether to apply the exposure compensation value to control both flash light and ambient light, or just ambient light.

1. MENU → ⚙ (Custom Settings) → [Exp.comp.set] → desired setting.

Menu item details

Ambient&flash (default setting):
Applies the exposure compensation value to control both flash light and ambient light.

Ambient only:
Applies the exposure compensation value to control ambient light only.

Zebra

The zebra pattern will appear over the part of an image if the brightness level exceeds the IRE that you set. Use this zebra pattern as a guide to adjust the brightness.

1. MENU → ⚙ (Custom Settings) → [Zebra] → desired setting.

Menu item details

Off (default setting):
Does not display the zebra pattern.
70/75/80/85/90/95/100/100+:
Adjusts the brightness level.

Note

- The zebra pattern is not displayed during HDMI connection.

Exposure Set. Guide

You can set whether to display a guide when you change the exposure.

1. MENU → ⚙ (Custom Settings) → [Exposure Set. Guide] → desired setting.

Menu item details

Off:
Does not display the guide.
On (default setting):
Displays the guide.

---

[91] How to Use | Using shooting functions | Adjusting the exposure

Exposure step

You can set the setting range for the shutter speed, aperture, and exposure compensation values.

1. MENU → 📷 (Camera Settings) → [Exposure step] → desired setting.

Menu item details

0.3EV (default setting)/0.5EV

Note

- Even if you set [Exposure step] to [0.5EV], the exposure value adjusted using the exposure compensation dial changes in steps of 0.3EV.

---

[92] How to Use | Using shooting functions | Adjusting the exposure

Dial Ev Comp

You can adjust the exposure using the front dial or rear dial when the exposure compensation dial is set to “0.”

1. MENU → ⚙ (Custom Settings) → [Dial Ev Comp] → desired setting.

Menu item details

Off (default setting):

Does not enable exposure compensation with the front or rear dial.

Front dial/ Rear dial:

Enables exposure compensation with the front or rear dial.

Note

- When the exposure compensation function is assigned to the front or rear dial, any function that had been assigned to that dial previously is re-assigned to another dial.
- When the exposure compensation dial is set to a position other than “0,” the settings of the exposure compensation dial will be prioritized. For example, if you set [Exposure Comp.] to +5.0EV, but the exposure compensation dial is set to +2.0EV, the “+2.0EV” setting will be prioritized.

---

[93] How to Use │ Using shooting functions │ Adjusting the exposure

Reset EV Comp.

Sets whether to maintain the exposure value set using[Exposure Comp.] when you turn off the power when the exposure compensation dial position is set to “0.”

1. MENU → (Custom Settings) → [Reset EV Comp.] → desired setting.

Menu item details

Maintain:

Maintains the settings of[Custom Settings].

Reset (default setting):

Resets the settings of[Exposure Comp.] to “0.”

---

[94] How to Use │ Using shooting functions │ Selecting a drive mode (Continuous shooting/Self-timer)

Drive Mode

You can set the drive mode, such as continuous or self-timer shooting.

1. MENU → (Camera Settings) → [Drive Mode] → desired setting.

Menu item details

Single Shooting (default setting):
Shoots one still image. Normal shooting mode.
Cont. Shooting:
Shoots images continuously while you press and hold down the shutter button.
Spd Priority Cont.:
Shoots images continuously at high speed while you press and hold down the shutter button.
Self-timer:
Shoots an image after 10 or 2 seconds.
Self-timer(Cont):
Shoots a specified number of images continuously after 10 seconds.
Cont. Bracket:
Shoots images while holding the shutter button down, each with different degrees of brightness.
Single Bracket:
Shoots a specified number of images, one by one, each with a different degree of brightness.
WB bracket:
Shoots a total of three images, each with a different color tones according to the selected settings for white balance, color temperature and color filter.
DRO Bracket:
Shoots a total of three images, each at a different degree of D-Range Optimizer.

Cont. Shooting

Shoots images continuously while you press and hold down the shutter button.

1. MENU→ (Camera Settings) → [Drive Mode] → [Cont. Shooting].

Hint

- To hold the focus and exposure during burst, change the following settings.
  - Set [Focus Mode] to [Continuous AF].
  - Set [AEL w/ shutter] to [Off] or [Auto].

Spd Priority Cont.

The product continues to shoot as long as the shutter button is pressed. You can continuously shoot at a rate faster than that of [Cont. Shooting].

1. MENU→ (Camera Settings) → [Drive Mode] → [Spd Priority Cont.].

Note

- The speed of continuous shooting is estimated using our criteria. The speed of continuous shooting may be slower, depending on shooting conditions (Image size, ISO setting, High ISO NR, or the setting of [Distortion Comp.]).
- Between continuous shooting frames, an image of each frame is immediately displayed.

Hint

- In [Spd Priority Cont.] mode, the focus is fixed when you press the shutter button halfway down for the first image, and the focus is fixed after that. However, the exposure value is adjusted for each image. To use the same exposure for subsequent shots, change the following settings.
  - Set [AEL w/ shutter] to [Auto] or [Off].

Self-timer

The product shoots an image using the self-timer with a 10-second or 2-second delay.

1. MENU → (Camera Settings) → [Drive Mode] → [Self-timer].
2. Select the desired mode using the right/left side of the control wheel.

Menu item details

10 Self-timer: 10 Sec (default setting):
Sets the 10-second delay self-timer.
When you press the shutter button, the self-timer lamp flashes, a beep sounds, and the shutter operates after 10 seconds. To cancel the self-timer, press the shutter button again.
2 Self-timer: 2 Sec:
Sets the 2-second delay self-timer. This reduces the camera-shake caused by pressing the

shutter button.

Hint

- Press the / button of the control wheel to end the self-timer.
- Press the / button and select (Single Shooting) of the control wheel to release the self-timer.

---

[98] How to Use │ Using shooting functions │ Selecting a drive mode (Continuous shooting/Self-timer)

Self-timer(Cont)

Continuously shoots the number of images you have set after 10 seconds. You can choose the best shot from several shots taken.

1. MENU → (Camera Settings) → [Drive Mode] → [Self-timer(Cont)].
2. Select the desired mode using the right/left side of the control wheel.

Menu item details

C3 Self-timer(Cont.): 10 Sec. 3 Img. (default setting):
Shoots three frames in succession 10 seconds after you press the shutter button.
When you press the shutter button, the self-timer lamp flashes, a beep sounds, and the shutter operates after 10 seconds.
C5 Self-timer(Cont.): 10 Sec. 5 Img.:
Shoots five frames in succession 10 seconds after you press the shutter button.
When you press the shutter button, the self-timer lamp flashes, a beep sounds, and the shutter operates after 10 seconds.

---

[99] How to Use │ Using shooting functions │ Selecting a drive mode (Continuous shooting/Self-timer)

Cont. Bracket

Shoots multiple images while automatically shifting the exposure from base to darker and then to lighter. Press and hold down the shutter button until the bracket recording is completed.
You can select an image that suits your intention, after recording.

1. MENU → (Camera Settings) → [Drive Mode] → [Cont. Bracket].
2. Select the desired mode using the right/left side of the control wheel.

Menu item details

Cont. Bracket: 0.3EV 3 Image (default setting):
This setting shoots three images continuously with an exposure value shifted by plus or minus 0.3 EV.

Cont. Bracket: 0.3EV 5 Image:
This setting shoots five images continuously with an exposure value shifted by plus or minus 0.3 EV.

Cont. Bracket: 0.5EV 3 Image:
This setting shoots three images continuously with an exposure value shifted by plus or minus 0.5 EV.

Cont. Bracket: 0.5EV 5 Image:
This setting shoots five images continuously with an exposure value shifted by plus or minus 0.5 EV.

Cont. Bracket: 0.7EV 3 Image:
This setting shoots three images continuously with an exposure value shifted by plus or minus 0.7 EV.

Cont. Bracket: 0.7EV 5 Image:
This setting shoots five images continuously with an exposure value shifted by plus or minus 0.7 EV.

Cont. Bracket: 1.0EV 3 Image:
This setting shoots three images continuously with an exposure value shifted by plus or minus 1.0 EV.

Cont. Bracket: 1.0EV 5 Images:
This setting shoots five images continuously with an exposure value shifted by plus or minus 1.0 EV.

Cont. Bracket: 2.0EV 3 Image:
This setting shoots three images continuously with an exposure value shifted by plus or minus 2.0 EV.

Cont. Bracket: 2.0EV 5 Images:
This setting shoots five images continuously with an exposure value shifted by plus or minus 2.0 EV.

Cont. Bracket: 3.0EV 3 Image:
This setting shoots three images continuously with an exposure value shifted by plus or minus 3.0 EV.

Cont. Bracket: 3.0EV 5 Images:
This setting shoots five images continuously with an exposure value shifted by plus or minus 3.0 EV.

Note

- The last shot is shown on the Auto Review.
- When [ISO AUTO] is selected in [Manual Exposure] mode, the exposure is changed by adjusting the ISO value. If a setting other than [ISO AUTO] is selected, the exposure is changed by adjusting the shutter speed.
- When you adjust the exposure, the exposure is shifted based on the compensated value.
- When the flash is used, the product performs flash bracket shooting, which shifts the amount of flash light even if [Cont. Bracket] is selected. Press the shutter button for each image.

Single Bracket

Shoots multiple images while automatically shifting the exposure from base to darker and then to lighter.
Press the shutter button for each image. You can select an image that suits your purpose after recording.

1. MENU → (Camera Settings) → [Drive Mode] → [Single Bracket].
2. Select the desired mode using the right/left side of the control wheel.

Menu item details

Single Bracket: 0.3EV 3 Image (default setting):
This setting shoots a total of three images in a row with an exposure value shifted by plus or minus 0.3 EV.

Single Bracket: 0.3EV 5 Image:
This setting shoots a total of five images in a row with an exposure value shifted by plus or minus 0.3 EV.

Single Bracket: 0.5EV 3 Image:
This setting shoots a total of three images in a row with an exposure value shifted by plus or minus 0.5 EV.

Single Bracket: 0.5EV 5 Image:

This setting shoots a total of five images in a row with an exposure value shifted by plus or minus 0.5 EV.

Single Bracket: 0.7EV 3 Image:
This setting shoots a total of three images in a row with an exposure value shifted by plus or minus 0.7 EV.

Single Bracket: 0.7EV 5 Image:
This setting shoots a total of five images in a row with an exposure value shifted by plus or minus 0.7 EV.

Single Bracket: 1.0EV 3 Image:
This setting shoots a total of three images in a row with an exposure value shifted by plus or minus 1.0 EV.

Single Bracket: 1.0EV 5 Images:
This setting shoots a total of five images in a row with an exposure value shifted by plus or minus 1.0 EV.

Single Bracket: 2.0EV 3 Image:
This setting shoots a total of three images in a row with an exposure value shifted by plus or minus 2.0 EV.

Single Bracket: 2.0EV 5 Images:
This setting shoots a total of five images in a row with an exposure value shifted by plus or minus 2.0 EV.

Single Bracket: 3.0EV 3 Image:
This setting shoots a total of three images in a row with an exposure value shifted by plus or minus 3.0 EV.

Single Bracket: 3.0EV 5 Images:
This setting shoots a total of five images in a row with an exposure value shifted by plus or minus 3.0 EV.

Note

- When [ISO AUTO] is selected in [Manual Exposure] mode, the exposure is changed by adjusting the ISO value. If a setting other than [ISO AUTO] is selected, the exposure is changed by adjusting the shutter speed.
- When you adjust the exposure, the exposure is shifted based on the compensated value.

WB bracket

Shoots three images, each with different color tones according to the selected settings of white balance, color temperature and color filter.

1. MENU → (Camera Settings) → [Drive Mode] → [WB bracket].
2. Select the desired mode using the right/left side of the control wheel.

Menu item details

BRK WB Lo White Balance Bracket: Lo (default setting):
Records a series of three images with small changes in the white balance.

BRK WB Hi White Balance Bracket: Hi:
Records a series of three images with large changes in the white balance.

Note

- The last shot is shown on the Auto Review.

DRO Bracket

You can record a total of three images, each at a different degree of D-Range Optimizer value.

1. MENU → (Camera Settings) → [Drive Mode] → [DRO Bracket].
2. Select the desired mode using the right/left side of the control wheel.

Menu item details

BRK DRO Lo DRO Bracket: Lo (default setting):
Records a series of three images with small changes in the D-Range Optimizer value.

BRK DRO Hi DRO Bracket: Hi:
Records a series of three images with large changes in the D-Range Optimizer value.

Note

- The last shot is shown on the Auto Review.

Bracket order

You can set the shooting order for exposure bracketing and white balance bracketing.

1. MENU → (Custom Settings) → [Bracket order] → desired setting

Menu item details

0→ → (default setting):
Records in the following order: 0 → − → +.
→0→ :
Records in the following order: − → 0 → +.

ISO

Sensitivity to light is expressed by the ISO number (recommended exposure index). The larger the number, the higher the sensitivity.

1. MENU → (Camera Settings) → [ISO] → desired setting.

Menu item details

Multi Frame NR:
Combines continuous shots to create an image with less noise.

ISO AUTO (default setting):
Sets the ISO sensitivity automatically.

50 / 64 / 80 / 100 / 125 / 160 / 200 / 250 /320/ 400 / 500 / 640 / 800 / 1000 / 1250 / 1600 / 2000 / 2500 / 3200 / 4000 / 5000 / 6400 / 8000 / 10000 / 12800 / 16000 / 20000 / 25600 / 32000 / 40000 /51200/ 64000 / 80000 / 102400 / 128000 / 160000 / 204800 / 256000 / 320000 / 409600:
You can reduce image blurring in dark locations or with moving subjects by increasing the ISO sensitivity (select a larger number).

Note

- [ISO AUTO] is selected when using the following functions:

- [Intelligent Auto]
- [Superior Auto]
- [Scene Selection]
- [Sweep Panorama]

- When [ISO] is set to a value lower than ISO 100, the range for recordable subject brightness (dynamic range) may decrease.
- The higher the ISO value, the more noise will appear on the images.
- When shooting movies, ISO values between ISO 100 and ISO 409600 are available. If the ISO value is set to a value smaller than ISO 100, the setting is automatically switched to ISO 100. When you finish recording the movie, the ISO value returns to the original setting.
- When you use [Multi Frame NR], it takes some time for the product to perform the overlay processing of images.

Hint

- You can change the automatically set ISO sensitivity range for the [ISO AUTO] mode. Select [ISO AUTO] and press the right side of the control wheel, and set the desired values for [ISO AUTO Maximum] and [ISO AUTO Minimum]. The values for [ISO AUTO Maximum] and [ISO AUTO Minimum] are also applied when shooting in[ISO AUTO] mode under [Multi Frame NR].

Multi Frame NR

The product automatically shoots multiple images continuously, combines them, reduces the noise, and records them as one image. The image recorded is one combined image.

1. MENU → (Camera Settings) → [ISO] → [Multi Frame NR].
2. Press the right side of the control wheel to display the setting screen, then select a desired value using the top/bottom side of the control wheel.

Note

- When [Quality] is set to [RAW] or [RAW & JPEG], this function cannot be used.
- The flash, [D-Range Opt.], and [Auto HDR] cannot be used.
- When [Picture Profile] is set to something other than[Off], you cannot set [Multi Frame NR].
- You cannot set [Multi Frame NR] when [Picture Effect] is set.

Hint

- You can change the automatically set range of ISO sensitivity in the [ISO AUTO] mode under [Multi Frame NR]. Select [ISO AUTO] under [ISO] and press the right side of the control wheel, and set the desired values for [ISO AUTO Maximum] and [ISO AUTO Minimum]. The values for [ISO AUTO Maximum] and [ISO AUTO Minimum] are also applied when shooting in [ISO AUTO] mode under [Multi Frame NR].

D-Range Opt. (DRO)

By dividing the image into small areas, the product analyzes the contrast of light and shadow between the subject and the background, and creates an image with the optimal brightness and gradation.

1. MENU → (Camera Settings) → [DRO/Auto HDR] → [D-Range Opt.].
2. Select the desired setting using the left/right side of the control wheel.

Menu item details

D-Range Optimizer: Auto (default setting):
Corrects the brightness automatically.

D-Range Optimizer: Lv1 — D-Range Optimizer: Lv5:
Optimizes the gradation of a recorded image for each divided area. Select the optimization level from Lv1 (weak) to Lv5 (strong).

Note

- [DRO/Auto HDR] is fixed to [Off] when the shooting mode is set to[Sweep Panorama], or when [Multi Frame NR] or [Picture Effect] is used.
- [DRO/Auto HDR] is fixed to [Off] when [Picture Profile] is set to something other than[Off].
- [DRO/Auto HDR] is fixed to [Off] when [Sunset], [Night Scene], [Night Portrait], [Hand-held Twilight] or [Anti Motion Blur] is selected in [Scene Selection]. The setting is fixed to [D-Range Optimizer: Auto] when other modes are selected in[Scene Selection].
- When shooting with [D-Range Opt.], the image may be noisy. Select the proper level by checking the recorded image, especially when you enhance the effect.

Auto HDR

Widens the range (gradation) so that you can record from bright parts to dark parts with correct brightness (HDR: High Dynamic Range). One image with proper exposure and one overlaid image are recorded.

1. MENU → (Camera Settings) → [DRO/Auto HDR] → [Auto HDR].
2. Select the desired setting using the left/right side of the control wheel.

Menu item details

Auto HDR: Exposure Diff. Auto (default setting):
Corrects the exposure difference automatically.

Auto HDR: Exposure Diff. 1.0EV — Auto HDR: Exposure Diff. 6.0EV:
Sets the exposure difference, based on the contrast of the subject. Select the optimal level between 1.0 EV (weak) and 6.0 EV (strong).
For example, if you set the exposure value to 2.0 EV, three images will be composed with the following exposure levels; −1.0 EV, optimal exposure and +1.0 EV.

Note

- [Auto HDR] is not available for RAW images.
- When the shooting mode is set to [Intelligent Auto], [Superior Auto], [Sweep Panorama] or [Scene Selection], you cannot select [Auto HDR].
- When [Multi Frame NR] is selected, you cannot select [Auto HDR].
- When using [Picture Effect], you cannot select [Auto HDR].
- When [Picture Profile] is set to something other than [Off], you cannot set [Auto HDR].
- You cannot start the next shot until the capture process is completed after you shoot.
- You may not obtain the desired effect depending on the luminance difference of a subject and the shooting conditions.
- When the flash is used, this function has little effect.
- When the contrast of the scene is low or when product shake or subject blur occurs, you may not obtain good HDR images. If the product has detected a problem, HDR ! is displayed on the recorded image to inform you of this situation. Shoot again as necessary, paying attention to the contrast or blur.

White Balance

Adjusts the color tones according to the ambient light conditions. Use this feature when the color tones of the image did not come out as you expected, or when you want to change the

color tones on purpose for photographic expression.

1. MENU → (Camera Settings) → [White Balance] → desired setting.

Menu item details

AWB Auto (default setting):
The product automatically detects the light source and adjusts the color tones.

Daylight:
The color tones are adjusted for the daylight.

Shade:
The color tones are adjusted for shadiness.

Cloudy:
The color temperature is adjusted for a cloudy sky.

Incandescent:
The color temperature is adjusted for places under an incandescent lamp, or under bright lighting, such as in a photo studio.

-1 Fluor.: Warm White:
The color temperature is adjusted for warm white fluorescent lighting.

0 Fluor.: Cool White:
The color temperature is adjusted for white fluorescent lighting.

+1 Fluor.: Day White:
The color temperature is adjusted for neutral white fluorescent lighting.

+2 Fluor.: Daylight:
The color temperature is adjusted for daylight fluorescent lighting.

WB Flash:
The color temperature is adjusted for flash light.

AWB Underwater Auto:
The color temperature is adjusted for underwater shooting.

K C.Temp./Filter:
Adjusts the color tones depending on the light source. Achieves the effect of CC (Color Compensation) filters for photography.

Custom 1/Custom 2/Custom 3:
Uses the white balance setting saved in[Custom Setup].

SET Custom Setup:
Memorizes the basic white color under the light conditions for the shooting environment. Select a memorized custom white balance number.

Hint

- You can use the right side of the control wheel to display the fine adjustment screen and perform fine adjustments of the color temperature as required.
- In [C.Temp./Filter], you can use the right button to display the color temperature setting screen and perform a setting. When you press the right button again, the fine adjustment screen appears to allow you perform fine adjustments as required.

Note

- [White Balance] is fixed to [Auto] in the following situations:
  - [Intelligent Auto]
  - [Superior Auto]
  - [Scene Selection]

[109] How to Use | Using shooting functions | Adjusting color tones

Capturing a basic white color in [Custom Setup] mode

In a scene where the ambient light consists of multiple types of light sources, it is recommended to use the custom white balance in order to accurately reproduce the whiteness.

1. MENU → (Camera Settings) → [White Balance] → [Custom Setup].
2. Hold the product so that the white area fully covers the AF area located in the center, and then press on the center of the control wheel.
   The calibrated values (Color Temperature and Color Filter) are displayed.
3. Select a registration number using the right/left button.
   The monitor returns to the recording information display while retaining the memorized custom white balance setting.

Note

- The message [Custom WB Error] indicates that the value is higher than the expected range, when the flash is used on a subject with too bright colors in the frame. If you register this value, the indicator turns yellow on the recording information display. You can shoot at this point, but it is recommended that you set the white balance again to get a more accurate white balance value.

[110] How to Use | Using shooting functions | Selecting an effect mode

Picture Effect

Select the desired effect filter to achieve more impressive and artistic images.

1. MENU → (Camera Settings) → [Picture Effect] → desired setting.

Menu item details

Off (default setting):
Disables the [Picture Effect] function.

Toy Camera:
Creates a soft image with shaded corners and reduced sharpness.

Pop Color:
Creates a vivid look by emphasizing color tones.

Posterization:
Creates a high contrast, abstract look by heavily emphasizing primary colors, or in black and white.

Retro Photo:
Creates the look of an aged photo with sepia color tones and faded contrast.

Soft High-key:
Creates an image with the indicated atmosphere: bright, transparent, ethereal, tender, soft.

Partial Color:
Creates an image which retains a specific color, but converts others to black and white.

High Contrast Mono.:
Creates a high-contrast image in black and white.

Soft Focus:
Creates an image filled with a soft lighting effect.

HDR Painting:
Creates the look of a painting, enhancing the colors and details.

Rich-tone Mono.:
Creates an image in black and white with rich gradation and reproduction of details.

Miniature:
Creates an image which enhances the subject vividly, with the background defocused considerably. This effect may often be found in pictures of miniature models.

Watercolor:
Creates an image with ink bleed and blurring effects as if painted using watercolors.

Illustration:

Creates an illustration-like image by emphasizing the outlines.

Hint

- You can perform detailed settings for the following [Picture Effect] modes using the left/right side of the control wheel.
  - [Toy Camera]
  - [Posterization]
  - [Partial Color]
  - [Soft Focus]
  - [HDR Painting]
  - [Miniature]
  - [Illustration]

Note

- When [Partial Color] is selected, images may not retain the selected color, depending on the subject or shooting conditions.
- You cannot check the following effects on the shooting screen, because the product processes the image after the shot. Also, you cannot shoot another image until image processing is finished. You cannot use these effects with movies.
  - [Soft Focus]
  - [HDR Painting]
  - [Rich-tone Mono.]
  - [Miniature]
  - [Watercolor]
  - [Illustration]
- In the case of [HDR Painting] and [Rich-tone Mono.], the shutter is released three times for one shot. Be careful about the following:
  - Use this function when the subject is motionless or does not flash light.
  - Do not change the composition before shooting.

  When the contrast of the scene is low or when significant camera-shake or subject blur has occurred, you may not be able to obtain good HDR images. If the product detects such a situation, / appear on the recorded image to inform you of this situation. If necessary, change the composition or otherwise adjust the settings, be careful of blurring, and shoot again.

Creative Style

Allows you to select the desired image processing. You can adjust exposure (shutter speed

and aperture) as you like with [Creative Style], unlike with [Scene Selection] where the product adjusts the exposure.

1. MENU → (Camera Settings) → [Creative Style] → desired setting.

Menu item details

Std. Standard (default setting):
For shooting various scenes with rich gradation and beautiful colors.

Vivid Vivid:
The saturation and contrast are heightened for shooting striking images of colorful scenes and subjects such as flowers, spring greenery, blue sky, or ocean views.

Ntrl Neutral:
The saturation and sharpness are lowered for shooting images in subdued tones. This is also suitable for capturing image material to be modified with a computer.

Clear Clear:
For shooting images in clear tones with limpid colors in highlight, suitable for capturing radiant light.

Deep Deep:
For shooting images with deep and dense colors, suitable for capturing the solid presence of the subject.

Light Light:
For shooting images with bright and simple colors, suitable for capturing a refreshingly light ambience.

Port. Portrait:
For shooting the skin color in a soft tone, ideally suited for shooting portraits.

Land. Landscape:
The saturation, contrast, and sharpness are heightened for shooting vivid and crisp scenery. Distant landscapes also stand out more.

Sunset Sunset:
For shooting the beautiful red of the setting sun.

Night Night Scene:
The contrast is lowered for reproducing night scenes.

Autm Autumn leaves:
For shooting autumn scenes, vividly highlighting the reds and yellows of changing leaves.

B/W Black & White:
For shooting images in black and white monotone.

Sepia Sepia:

For shooting images in sepia monotone.

To set [Contrast], [Saturation] and [Sharpness]

[Contrast], [Saturation] and [Sharpness] can be adjusted for each [Creative Style] item. Select an item to be set by pressing the right/left side of the control wheel, then set the value using the top/bottom side of the control wheel.

Contrast:

The higher the value selected, the more the difference of light and shadow is accentuated, and the bigger the effect on the image.

Saturation:

The higher the value selected, the more vivid the color. When a lower value is selected, the color of the image is restrained and subdued.

Sharpness:

Adjusts the sharpness. The higher the value selected, the more the contours are accentuated, and the lower the value selected, the more the contours are softened.

Registering preferred settings (Style Box)

Select the six style box (the boxes with numbers on the left side (1 Std.)) to register preferred settings. Then select the desired settings using the right side of the control wheel.
You can call up the same style with slightly different settings.

Note

- [Standard] is selected when using the following functions:
  - [Intelligent Auto]
  - [Superior Auto]
  - [Scene Selection]
  - [Picture Effect]
  - [Picture Profile]
- When [Creative Style] is set to [Black & White] or [Sepia], [Saturation] cannot be adjusted.

Movie recording formats

You can use the movie recording format "XAVC S" with this camera. For details on the "XAVC S" format, see the following description.

What is XAVC S?

Records high-definition movies by converting them to MP4 movies using the MPEG-4 AVC/H.264 codec. MPEG-4 AVC/H.264 is capable of compressing images at higher efficiency. You can record high-quality images while reducing the amount of data.

XAVC S/AVCHD recording format

XAVC S:

Bit-rate: Approx. 50 Mbps*
Records a more vivid movie compared to AVCHD with increased amounts of information.

AVCHD:

Bit-rate: Approx. 28Mbps*
The AVCHD format has a high degree of compatibility with storage devices other than computers.

- Bit rate is the amount of the data processed within a given length of time.

*Max.

File Format (movie)

Selects the movie file format.

1. MENU → (Camera Settings) → [File Format] → desired setting.

Menu item details

XAVC S:

Records 60p/50p/30p/25p/24p*/120p/100p movies in XAVC S format. This file format is suitable for high bit rates.
*Only for 1080 60i compatible models.

Audio: LPCM

- You cannot create discs using the software PlayMemories Home with movies that are recorded with [File Format] set to [XAVC S].
- When recording movies with [File Format] set to [XAVC S], you need an SDXC memory card of Class 10 or faster.

AVCHD (default setting):
Records 60i/50i/60p/50p/24p/25p movies in AVCHD format. This file format is suitable for high-definition TV.
You can create a Blu-ray Disc, an AVCHD recording disc, or a DVD-Video disc using the software PlayMemories Home.
Audio: Dolby Digital
MP4:
Records mp4 (AVC) movies. This format is suitable for WEB uploads, e-mail attachments, etc.

Audio: AAC

- You cannot create a disc using the software PlayMemories Home with a movie that was recorded when [File Format] was set to [MP4].

Record Setting (movie)

Selects the image size, frame rate, and image quality for movie recording. The higher the bit-rate, the higher the image quality.

1. MENU → (Camera Settings) → [Record Setting] → desired setting.

When [File Format] is set to [XAVC S]

Records high-definition movies by converting them to MP4 file format using the MPEG-4 AVC/H.264 codec.

When [File Format] is set to [AVCHD]

60i/50i: Movies are recorded at approximately 60 fields/sec (for 1080 60i-compatible devices) or 50 fields/sec (for 1080 50i-compatible devices), in interlaced mode, with Dolby Digital audio, in AVCHD format.
24p/25p: Movies are recorded at approximately 24 frames/sec (for 1080 60i-compatible devices) or 25 frames/sec (for 1080 50i-compatible devices), in progressive mode, with Dolby Digital audio, in AVCHD format.
60p/50p: Movies are recorded at approximately 60 frames/sec (for 1080 60i-compatible devices) or 50 frames/sec (for 1080 50i-compatible devices), in progressive mode, with Dolby Digital audio, in AVCHD format.

When [File Format] is set to [MP4]

Movies shot are recorded in MPEG-4 format, at approximately 30 frames/sec (for 1080 60i-compatible devices) or approximately 25 frames/sec (for 1080 50i-compatible devices), in progressive mode, with AAC audio, mp4 format.

Menu items details

When [File Format] is set to [XAVC S]

60p 50M*/50p 50M (default setting):**
Records high image quality movies at 1920 × 1080 (60p/50p).
Bit-rate: Approx. 50 Mbps (Ave.)

**

30p 50M/25p 50M :

Records high image quality movies at 1920 × 1080 (30p/25p).
Bit-rate: Approx. 50 Mbps (Ave.)

24p 50M (Only for 1080 60i compatible models):

Records high image quality movies at 1920 × 1080 (24p). This produces a cinema-like atmosphere.
Bit-rate: Approx. 50 Mbps (Ave.)

120p 50M*/100p 50M:**

Records 1280 × 720 size movies at a high speed. Movies and sound can be recorded at 120 fps/100 fps. You can create smoother slow-motion images using compatible editing equipment.
Bit-rate: Approx. 50 Mbps (Max.)

When [File Format] is set to [AVCHD]

60i 24M(FX)*:
50i 24M(FX):**

Records high image quality movies of 1920 × 1080 (60i/50i).
Bit-rate: Approx. 24 Mbps (Max.)

60i 17M(FH) (default setting)*:
50i 17M(FH) (default setting):**

Records standard image quality movies of 1920 × 1080 (60i/50i).
Bit-rate: Approx. 17 Mbps (Ave.)

60p 28M(PS)*:
50p 28M(PS):**

Records the highest image quality movies of 1920 × 1080 (60p/50p).
Bit-rate: Approx. 28 Mbps (Max.)

24p 24M(FX)*:
25p 24M(FX):**

Records high image quality movies of 1920 × 1080 (24p/25p). This produces a cinema-like atmosphere.
Bit-rate: Approx. 24 Mbps (Max.)

24p 17M(FH)*:
25p 17M(FH):**

Records standard image quality movies of 1920 × 1080 (24p/25p). This produces a cinema-like atmosphere.
Bit-rate: Approx. 17 Mbps (Ave.)

When [File Format] is set to [MP4]

1440×1080 12M (default setting):

Records movies of 1440 × 1080.

Bit-rate: Approx. 12 Mbps (Ave.)

VGA 3M:

Records movies of VGA size.
Bit-rate: Approx. 3 Mbps (Ave.)

* 1080 60i (NTSC) compatible device
** 1080 50i (PAL) compatible device

Note

- 60p/50p movies can be played back only on compatible devices.
- Movies recorded with the [60p 28M(PS)]/[50p 28M(PS)]/[60i 24M(FX)]/[50i 24M(FX)]/ [24p 24M(FX)] /[25p 24M(FX)] setting in [Record Setting] are converted by PlayMemories Home in order to create an AVCHD recording disc. This conversion can take a long time. Also, you cannot create a disc in the original image quality. If you want to keep the original image quality, store your movies on a Blu-ray Disc.
- To play back 24p/25p movies on a TV, the TV must be compatible with the 24p/25p formats. If the TV is not compatible with the 24p/25p format, 24p/25p movies will be output as 60i/50i movies.
- You cannot create discs with movies recorded with [XAVC S] or [MP4] recording settings using PlayMemories Home.
- [120p 50M]/[100p 50M] cannot be set with the following functions.
  - [Intelligent Auto]
  - [Superior Auto]
  - [Scene Selection]

Dual Video REC

Allows you to simultaneously record an XAVC S movie and an MP4 movie, or an AVCHD movie and an MP4 movie.

1. MENU → (Camera Settings) → [Dual Video REC] → desired setting.

Menu item details

On:

An XAVC S movie and an MP4 movie, or an AVCHD movie and an MP4 movie, are recorded simultaneously.

Off (default setting):

The [Dual Video REC] function is not used.

Note

- When [Record Setting] for an XAVC S movie is set to [60p]/[50p] or [120p]/[100p], [Record Setting] for an AVCHD movie is set to [60p]/[50p], or [File Format] is set to [MP4], the [Dual Video REC] function is set to [Off].
- If you select [Date View] in [View Mode] when playing back movies, XAVC S movies and MP4 movies, or AVCHD movies and MP4 movies are displayed side-by-side.

---

[116] How to Use | Using shooting functions | Recording movies

Marker Display

Sets whether or not to display markers to enable alignment to a structure while shooting movies.

1. MENU → (Custom Settings) → [Marker Display] → desired setting.

Menu item details

On:

Markers are displayed. The markers are not recorded on the medium.

Off (default setting):

No marker is displayed.

Note

- You cannot display markers when using [Focus Magnifier] or [MF Assist].
- The markers are displayed on the screen. (You cannot output the markers.)

---

[117] How to Use | Using shooting functions | Recording movies

Marker Settings

Sets the markers to be displayed while shooting movies.

1. MENU → (Custom Settings) → [Marker Settings] → desired setting.

Menu item details

Center:

Sets whether or not to display the center marker in the center of the shooting screen.
Off (default setting) / On

Aspect:

Sets the aspect marker display.
Off (default setting) / 4:3 / 13:9 / 14:9 / 15:9 / 1.66:1 / 1.85:1 / 2.35:1

Safety Zone:

Sets the safety zone display. This becomes the standard range that can be received by a general household TV.
Off (default setting) / 80% / 90%

Guideframe:

Sets whether or not to display the guide frame. You can verify whether the subject is level or perpendicular to the ground.
Off (default setting) / On

Hint

- You can display all the markers at the same time.
- Place the subject on the cross point of the [Guideframe] to make a balanced composition.

Audio Recording

Sets whether to record sounds when shooting movies.

1. MENU → (Camera Settings) → [Audio Recording] → desired setting.

Menu item details

On (default setting):
Records sound (stereo).
Off:
Does not record sound.

Note

- The noise of the lens and the product in operation will also be recorded, when [On] is selected.

Audio Level Display

Sets whether to display the audio level on the screen.

1. MENU→ (Custom Settings) → [Audio Level Display] → desired setting.

Menu item details

On (default setting):

Displays the audio level.

Off:

Does not display the audio level.

Note

- The audio level is not displayed in the following situations:
  - When [Audio Recording] is set to [Off].
  - When DISP (Display Setting) is set to [No Disp. Info.].
- Set the shooting mode to [Movie]. You can see the audio level before recording only in movie recording mode.

Audio Rec Level

You can adjust the audio recording level while checking the level meter.

1. MENU → (Camera Settings) → [Audio Rec Level] → desired setting.

Menu item details

+:

Turns up the audio recording level.

−:

Turns down the audio recording level.

Reset:

Resets the audio recording level to the default setting.

Note

- Regardless of the [Audio Rec Level] settings, the limiter always operates.
- [Audio Rec Level] is available only when the shooting mode is set to Movie.
- The [Audio Rec Level] settings are applied for both the internal microphone and the (Microphone) terminal input.

Hint

- When you record audio movies with loud volumes, set[Audio Rec Level] to a lower sound level. Doing so enables you to record more realistic audio. When you record audio movies with lower volumes, set [Audio Rec Level] to a greater sound level to make the sound easier to hear.

---

[121] How to Use | Using shooting functions | Recording movies

Audio Out Timing

You can set echo cancellation for shooting when confirming audio via HDMI output.

1. MENU → (Camera Settings) → [Audio Out Timing] → desired setting.

Menu item details

Live (default setting):

Outputs audio without delay when recording movies. Select this setting when audio deviation is a problem during audio monitoring.

Lip Sync:

Outputs video and audio in sync when recording movies. Select this setting to prevent undesirable deviations between video and audio.

---

[122] How to Use | Using shooting functions | Recording movies

Wind Noise Reduct.

Sets whether or not to reduce wind noise during movie recording.

1. MENU → (Camera Settings) → [Wind Noise Reduct.] → desired setting.

Menu item details

On:
Reduces wind noise.
Off (default setting):
Does not reduce wind noise.

Note

- Setting this item to [On] where wind is not blowing sufficiently hard may cause normal sound to be recorded with too low volume.
- When an external microphone (sold separately) is used, [Wind Noise Reduct.] does not function.

---

[123] How to Use | Using shooting functions | Recording movies

Auto Slow Shut. (movie)

Sets whether or not to adjust the shutter speed automatically when recording movies if the subject is dark.

1. MENU → (Camera Settings) → [Auto Slow Shut.] → desired setting.

Menu item details

On (default setting):
Uses [Auto Slow Shut.]. The shutter speed automatically slows when recording in dark locations. You can reduce noise in the movie by using a slow shutter speed when recording in dark locations.
Off:
Does not use [Auto Slow Shut.]. The recorded movie will be darker than when[On] is selected, but you can record movies with smoother motion and less object blur.

Note

- [Auto Slow Shut.] does not function in the following situations:
  - When [Movie] in shooting mode is set to [Shutter Priority] or [Manual Exposure].
  - When [ISO] is set to other than [ISO AUTO].

---

[124] How to Use | Using shooting functions | Recording movies

MOVIE Button

Sets whether or not to activate the MOVIE button.

1. MENU → (Custom Settings) → [MOVIE Button] → desired setting.

Menu item details

Always (default setting):
Starts movie recording when you press the MOVIE button in any mode.
Movie Mode Only:
Starts movie recording when you press the MOVIE button only if the shooting mode is set to [Movie] mode.

Picture Profile

Allows you to change the settings for the color, gradation, etc for movies.

Customizing the picture profile

You can customize the picture quality by adjusting picture profile items such as [Gamma] and [Detail]. When setting these parameters, connect the camera to a TV or monitor, and adjust them while observing the picture on the screen.

1. MENU → (Camera Settings) → [Picture Profile] → the profile you want to change.
2. Move to the item index screen by pressing the right side of the control wheel.
3. Select the item to change using the up/down sides of the control wheel.
4. Select the desired value using the up/down sides of the control wheel and press in the center.

Using the preset of the picture profile
The default settings [PP1] through [PP7] for movies have been set in advance in the camera based on various shooting conditions.
MENU → (Camera Settings) → [Picture Profile] → desired setting.

PP1:

Example setting using [Movie] gamma

PP2:

Example setting using [Still] gamma

PP3:

Example setting of natural color tone using the ITU709 gamma

PP4:

Example setting of a color tone faithful to the[ITU709] standard

PP5:

Example setting using [Cine1] gamma

PP6:

Example setting using [Cine2] gamma

PP7:

Example setting using [S-Log2] gamma

Items of the picture profile

Black Level

Sets the black level. (–15 to +15)

Gamma

Selects a gamma curve.

Movie: Standard gamma curve for movies

Still: Standard gamma curve for still images

Cine1: Softens the contrast in dark parts and emphasizes gradation in bright parts to produce a relaxed color movie. (equivalent to HG4609G33)

Cine2: Similar to [Cine1] but optimized for editing with up to 100% video signal. (equivalent to HG4600G30)

Cine3: Intensifies the contrast in light and shade more than[Cine1] and [Cine2] and strengthens gradation in black.

Cine4: Strengthens the contrast in dark parts more than[Cine3]. The contrast in dark parts is lower and the contrast in bright parts is higher than for [Movie].

ITU709: Gamma curve that corresponds to ITU-709.

ITU709(800%): Gamma curve for confirming scenes on the assumption of shooting using[S-Log2].

S-Log2: Gamma curve for [S-Log2]. This setting is based on the assumption that the picture will be processed after shooting.

Black Gamma

Corrects gamma in low intensity areas.

Range: Selects the correcting range. (Wide / Middle / Narrow)

Level: Sets the correcting level. (-7 (maximum black compression) to +7 (maximum black stretch))

Knee

Sets knee point and slope for video signal compression to prevent over-exposure by limiting signals in high intensity areas of the subject to the dynamic range of your camera.
When selecting [Still], [Cine1], [Cine2], [Cine3], [Cine4], [ITU709(800%)], [S-Log2] in [Gamma], [Knee] is set to [Off] if [Mode] is set to [Auto]. To use functions in [Knee], set [Mode] to [Manual].

Mode

Selects auto/manual settings.

Auto: The knee point and slope are set automatically.

Manual: The knee point and slope are set manually.

Auto Set

Settings when [Auto] is selected.

Max Point: Sets the maximum point of the knee point. (90% to 100%)

Sensitivity: Sets the sensitivity. (High / Mid / Low)

Manual Set: Settings when [Manual] is selected.

Point: Sets the knee point. (75% to 105%)

Slope: Sets the knee slope. (-5 (gentle) to +5 (steep))

Color Mode

Sets type and level of colors.

Movie: Suitable colors when [Gamma] is set to [Movie].

Still: Suitable colors when [Gamma] is set to [Still].

Cinema: Suitable colors when [Gamma] is set to [Cine1].

Pro: Similar color tones to the standard image quality of Sony professional cameras (when combined with ITU-709 gamma)

ITU709 Matrix: Colors corresponding to ITU-709 standard (when combined with ITU-709 gamma)

Black & White: Sets the saturation to zero for shooting in black and white.

S-Gamut: Setting based on the assumption that the pictures will be processed after shooting. Used when [Gamma] is set to [S-Log2].

Saturation

Sets the color saturation. (-32 to +32)

Color Phase

Sets the color phase. (-7 to +7)

Color Depth

Sets the color depth for each color phase. This function is more effective for chromatic colors and less effective for achromatic colors. The color looks deeper as you increase the setting value towards the positive side, and lighter as you decrease the value towards the negative side. This function is effective even if you set [Color Mode] to [Black & White].

[R] -7 (light red) to +7 (deep red)

[G] -7 (light green) to +7 (deep green)

[B] -7 (light blue) to +7 (deep blue)

[C] -7 (light cyan) to +7 (deep cyan)

[M] -7 (light magenta) to +7 (deep magenta)

[Y] -7 (light yellow) to +7 (deep yellow)

Detail

Sets items for [Detail].

Level: Sets the [Detail] level. (-7 to +7)

Adjust: The following parameters can be selected manually.

- Mode: Selects auto/manual setting. (Auto (automatic optimization) / Manual (The details are set manually.))
- V/H Balance: Sets the vertical (V) and horizontal (H) balance of DETAIL. (-2 (off to the vertical (V) side) to +2 (off to the horizontal (H) side))
- B/W Balance: Selects the balance of the lower DETAIL (B) and the upper DETAIL (W). (Type1 (off to the lower DETAIL (B) side) to Type5 (off to the upper DETAIL (W) side))
- Limit: Sets the limit level of[Detail]. (0 (Low limit level: likely to be limited) to 7 (High limit level: unlikely to be limited))
- Crispning: Sets the crispening level. (0 (shallow crispening level) to 7 (deep crispening level))
- Hi-Light Detail: Sets the [Detail] level in the high intensity areas. (0 to 4)

Copy

Copies the settings of the picture profile to another picture profile number.

MENU → (Camera Settings) → [Picture Profile] → [Copy]

Reset

Resets the picture profile to the default setting. You cannot reset all picture profile settings at once.

MENU → (Camera Settings) → [Picture Profile] → [Reset]

Note

- Since the parameters are shared for movie and still images, adjust the value when you change the shooting mode.
- If you print RAW images with shooting settings, the following settings are not reflected.
  - Black Level
  - Black Gamma
  - Knee
  - Color Depth
- If you change [Gamma], the available ISO value range changes.
- There may be more noise in dark parts depending on the gamma settings. It may improve by setting the lens compensation to [Off].
- When using S-Log2 gamma, the noise becomes more noticeable compared to when using other gammas. If the noise still is significant even after processing pictures, it may be improved by shooting with a brighter setting. However, the dynamic range becomes narrower accordingly when you shoot with a brighter setting. We recommend checking the picture in advance by test shooting when using S-log2.
- Setting [ITU709(800%)] or [S-Log2] may cause an error in the white balance custom setup. In that case, set the exposure bright first and then perform custom setup.
- Setting [ITU709(800%)] or [S-Log2] disables the [Black Level] setting.
- If you set [Slope] to +5 in [Manual Set], [Knee] is set to [Off].
- S-Gamut is a color space unique to Sony that provides a wide color space equivalent to film cameras. However, S-Gamut setting of this camera does not support the whole color space of S-Gamut; it is a setting to realize a color reproduction equivalent to S-Gamut.

Video Light Mode

Sets the illumination setting for a video light (sold separately).

1. MENU → ⚙ (Custom Settings) → [Video Light Mode] → desired setting.

Menu item details

Power Link (default setting):

The video light turns on/off in sync with the ON/OFF operation of this camera.

REC Link:

The video light turns on/off in sync with movie recording start/stop.

REC Link&STBY:

The video light turns on when movie recording starts and dims when not recording (STBY).

Auto:

The video light automatically turns on when it is dark.

Memory

Allows you to register up to 2 often-used modes or product settings in the product. You can recall the settings using just the mode dial.

1. Set the product to the setting you want to register.
2. MENU → (Camera Settings) → [Memory] → desired number.

Items that can be registered

- Shooting mode
- Aperture (F number)
- Shutter speed
- Camera Settings

To recall registered settings

Select the memory number from "1" or "2" on the mode dial.
Then press the right/left side of the control wheel to select the desired memory number.

- M1 through M4 can be selected only when a memory card is inserted into the product.

To change registered settings

Change the setting to the desired one and re-register the setting to the same mode number.

Note

- Program Shift cannot be registered.
- For some functions, the position of the dial and the setting actually used for shooting may not match. If this happens, shoot images by referring to the information displayed on the monitor.

Function Menu Set.

You can assign the functions to be called up when you press theFn (Function) button.

1. MENU → ⚙ (Custom Settings) → [Function Menu Set.] → set a function to the desired location.

The functions that can be assigned are displayed on the setup item selection screen.

[129] How to Use │ Using shooting functions │ Customizing the shooting functions for convenient use

Custom Key Settings

Assigning functions to the various keys allows you to speed up operations by pressing the appropriate key when the shooting information screen is displayed.

1. MENU → ⚙ (Custom Settings) → [Custom Key Settings] → set a function to the desired key.

Note

- Some functions cannot be assigned to certain keys.

[130] How to Use │ Using shooting functions │ Customizing the shooting functions for convenient use

Function of the control wheel

Once you assign a function to the control wheel, you can perform that function by simply turning the wheel when the shooting information screen is displayed.

1. MENU → ⚙ (Custom Settings) → [Custom Key Settings] → [Control Wheel] → desired setting.

The functions that can be assigned are displayed on the setup item selection screen.

[131] How to Use │ Using shooting functions │ Customizing the shooting functions for convenient use

Function of the focus hold button

Allows you to assign a function to the focus hold button on the lens.

1. MENU → ⚙ (Custom Settings) → [Custom Key Settings] → [Focus Hold Button] → desired setting.

The functions that can be assigned are displayed on the setup item selection screen.

[132] How to Use │ Using shooting functions │ Customizing the shooting functions for convenient use

Function of the AEL button

Once you assign a function to the AEL button, you can perform that function by simply pressing the AEL button when the shooting information screen is displayed.

1. MENU→ ⚙ (Custom Settings) → [Custom Key Settings] → [AEL Button] → desired setting.

The functions that can be assigned are displayed on the setup item selection screen.

[133] How to Use │ Using shooting functions │ Customizing the shooting functions for convenient use

Function of the AF/MF button

Once you assign a function to the AF/MF button, you can perform that function by simply pressing the AF/MF button when the shooting information screen is displayed.

1. MENU → ⚙ (Custom Settings) → [Custom Key Settings] → [AF/MF Button] → desired setting.

The functions that can be assigned are displayed on the setup item selection screen.

[134] How to Use │ Using shooting functions │ Customizing the shooting functions for convenient use

Function of the Custom button

Once you assign a function to the Custom button, you can perform that function by simply pressing the Custom button when the shooting information screen is displayed.

1. MENU → ⚙ (Custom Settings) → [Custom Key Settings] → [Custom Button] → desired setting.

The functions that can be assigned are displayed on the setup item selection screen.

[135] How to Use │ Using shooting functions │ Customizing the shooting functions for convenient use

Function of the center button

Once you assign a function to the center button, you can perform that function by simply pressing the center button when the shooting information screen is displayed.

1. MENU → ⚙ (Custom Settings) → [Custom Key Settings] → [Center Button] → desired setting.

The functions that can be assigned are displayed on the setup item selection screen.

[136] How to Use │ Using shooting functions │ Customizing the shooting functions for convenient use

Function of the left button

Once you assign a function to the left button, you can perform that function by simply pressing the left button when the shooting information screen is displayed.

1. MENU → ⚙ (Custom Settings) → [Custom Key Settings] → [Left Button] → desired setting.

The functions that can be assigned are displayed on the setup item selection screen.

---

[137] How to Use │ Using shooting functions │ Customizing the shooting functions for convenient use

Function of the right button

Once you assign a function to the right button, you can perform that function by simply pressing the right button when the shooting information screen is displayed.

1. MENU → ⚙ (Custom Settings) → [Custom Key Settings] → [Right Button] → desired setting.

The functions that can be assigned are displayed on the setup item selection screen.

---

[138] How to Use │ Using shooting functions │ Customizing the shooting functions for convenient use

Function of the down button

Once you assign a function to the down button, you can perform that function by simply pressing the down button when the shooting information screen is displayed.

1. MENU → ⚙ (Custom Settings) → [Custom Key Settings] → [Down Button] → desired setting.

The functions that can be assigned are displayed on the setup item selection screen.

---

[139] How to Use │ Using shooting functions │ Customizing the shooting functions for convenient use

Dial Setup

You can switch the functions of the front/rear dial.

1. MENU → ⚙ (Custom Settings) → [Dial Setup] → desired setting.

Menu item details

SS F/no.:
The front dial is used to change the shutter speed and the rear dial to change the aperture value.
F/no. SS (default setting):
The front dial is used to change the aperture value and the rear dial to change the shutter speed.

Note

- The [Dial Setup] function is enabled when the shooting mode is set to “M.”

Smile/Face Detect.

Detects the faces of your subjects and adjusts the focus, exposure, flash settings and performs image processing automatically.

1. MENU → (Camera Settings) → [Smile/Face Detect.] → desired setting.

Menu item details

Off (default setting):
Does not use the Face Detection function.
On (Regist. Faces):
Detects the registered face with higher priority using [Face Registration].
On:
Detects a face without giving higher priority to the registered face.
Smile Shutter:
Automatically detects and shoots a smile.

Face Detection frame

- When the product detects a face, the gray face detection frame appears. When the product determines that autofocus is enabled, the face detection frame turns white. When you press the shutter button halfway down, the frame turns green.
- In case you have registered the priority order for each face using [Face Registration], the product automatically selects the first prioritized face and the face detection frame over that face turns white. The face detection frames of other registered faces turn reddish-purple.

Tips for capturing smiles more effectively

- Do not cover the eyes with front hair and keep the eyes narrowed.
- Do not obscure the face by a hat, masks, sunglasses, etc.
- Try to orient the face in front of the product and be as level as possible.
- Give a clear smile with an open mouth. The smile is easier to be detected when the teeth are shown.
- If you press the shutter button during Smile Shutter, the product shoots the image. After shooting, the product returns to Smile Shutter mode.

Hint

- When the [Smile/Face Detect.] is set to [Smile Shutter], you can select the Smile Detection Sensitivity from [On: Slight Smile], [On: Normal Smile] and [On: Big Smile].

Note

- You cannot use the Face Detection function with the following functions:
  - When using zoom functions other than the optical zoom
  - [Sweep Panorama]
  - [Picture Effect] is set to [Posterization].
  - When using the [Focus Magnifier] function.
  - [Scene Selection] is set to [Landscape], [Night Scene] or [Sunset].
- Up to eight faces of your subjects can be detected.
- The product may not detect faces at all or may accidentally detect other objects as faces in some conditions.
- If the product cannot detect a face, set the Smile Detection Sensitivity.
- If you track a face using [Lock-on AF] while executing [Smile Shutter], Smile Detection is performed only for that face.

Soft Skin Effect (still image)

Sets the effect used for shooting the skin smoothly in the Face Detection function.

1. MENU → (Camera Settings) → [Soft Skin Effect] → desired setting.

Menu item details

Off (default setting):
Does not use the [Soft Skin Effect] function.
On:
Uses the [Soft Skin Effect].

Hint

- When [Soft Skin Effect] is set to [On], you can select the effect level.

---

[142] How to Use | Using shooting functions | Setting the other functions of this product

Face Registration (New Registration)

If you register faces in advance, the product can detect the registered face as a priority when [Smile/Face Detect.] is set to [On (Regist. Faces)].

1. MENU → (Custom Settings) → [Face Registration] → [New Registration].
2. Align the guide frame with the face to be registered, and press the shutter button.
3. When a confirmation message appears, select [Enter].

Note

- Up to eight faces can be registered.
- Shoot the face from the front in a brightly lit place. The face may not be registered correctly if it is obscured by a hat, a mask, sunglasses, etc.

---

[143] How to Use | Using shooting functions | Setting the other functions of this product

Face Registration (Order Exchanging)

When multiple faces are registered to be given priority, the face registered first will be given priority. You can change the priority order.

1. MENU → (Custom Settings) → [Face Registration] → [Order Exchanging].

2. Select a face to change the order of priority.
3. Select the destination.

---

[144] How to Use | Using shooting functions | Setting the other functions of this product

Face Registration (Delete)

Deletes a registered face.

1. MENU → (Custom Settings) → [Face Registration] → [Delete].
   If you select [Delete All], you can delete all registered faces.

Note

- Even if you execute [Delete], the data for registered face will remain in the product. To delete the data for registered faces from the product, select [Delete All].

---

[145] How to Use | Using shooting functions | Setting the other functions of this product

Red Eye Reduction

When using the flash, it is fired two or more times before shooting to reduce the red-eye phenomenon.

1. MENU → (Camera Settings) → [Red Eye Reduction] → desired setting.

Menu item details

On:
The flash is always fired to reduce the red-eye phenomenon.
Off (default setting):
Does not use Red Eye Reduction.

Note

- Red Eye Reduction may not produce the desired effects. It depends on individual differences and conditions, such as distance to the subject, or whether the subject looks at the pre-strobe or not.

Auto Obj. Framing (still image)

When this product detects and shoots faces, macro shooting subjects or subjects that are tracked by [Lock-on AF], the product automatically trims the image into an appropriate composition, and then saves it. Both the original and the trimmed images are saved. The trimmed image is recorded in the same size as the original image size.

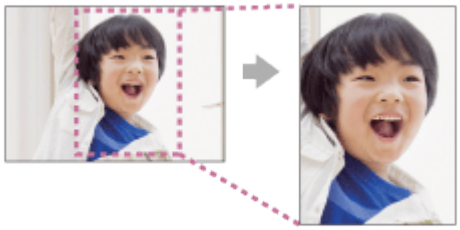

1. MENU → (Camera Settings) → [Auto Obj. Framing] → desired setting.

Menu item details

Off (default setting):
Does not trim images.

Auto:
Automatically trims images into an appropriate composition.

Note

- The trimmed image may not be the best possible composition, depending on the shooting conditions.

SteadyShot

Sets whether or not to use the SteadyShot function.

1. MENU → (Camera Settings) → [SteadyShot] → desired setting.

Menu item details

On (default setting):
Uses [SteadyShot].
Off:
Does not use [SteadyShot].
We recommend that you set [SteadyShot] to [Off] when using a tripod.

Note

- You cannot set [SteadyShot] when you are using an A-mount lens (sold separately), or when the name of the attached lens does not contain the letters “OSS,” such as “E16mm F2.8.”

---

[148] How to Use | Using shooting functions | Setting the other functions of this product

Long Exposure NR (still image)

When you set the shutter speed to one second or longer (long exposure shooting), noise reduction is turned on for the duration that the shutter is open. With the function turned on, the grainy noise typical of long exposures is reduced.

1. MENU → (Camera Settings) → [Long Exposure NR] → desired setting.

Menu item details

On (default setting):
Activates noise reduction for the same duration that the shutter is open. When noise reduction is in progress, a message appears and you cannot take another picture. Select this to prioritize the image quality.

Off:
Does not activate noise reduction. Select this to prioritize the timing of shooting.

---

[149] How to Use | Using shooting functions | Setting the other functions of this product

High ISO NR (still image)

When shooting with high ISO sensitivity, the product reduces noise that becomes more noticeable when the product sensitivity is high. A message may be displayed during noise reduction processing; you cannot shoot another image until the message disappears.

1. MENU → (Camera Settings) → [High ISO NR] → desired setting.

Menu item details

Normal (default setting):

Activates high ISO noise reduction normally.

Low:

Activates high ISO noise reduction moderately. Select this to prioritize the timing of shooting.

Off:

Does not activate high ISO noise reduction.

Note

- [High ISO NR] is not available in the following situations:
  - When the shooting mode is set to [Intelligent Auto], [Superior Auto] or [Sweep Panorama].
  - [Scene Selection]
- [High ISO NR] is not available for RAW images.

Color Space (still image)

The way colors are represented using combinations of numbers or the range of color reproduction is called “color space.” You can change the color space depending on the purpose of the image.

1. MENU → (Camera Settings) → [Color Space] → desired setting.

Menu item details

sRGB (default setting):

This is the standard color space of the digital camera. Use[sRGB] in normal shooting, such as when you intend to print out the images without any modification.

AdobeRGB:

This color space has a wide range of color reproduction. When a large part of the subject is vivid green or red, Adobe RGB is effective. The file name of the image starts with “_DSC.”

Note

- [AdobeRGB] is for applications or printers that support color management and DCF2.0 option color space. Images may not be printed or viewed in the correct colors if you use

applications or printers that do not support Adobe RGB.
- When displaying images that were recorded with [AdobeRGB] on this product or non-Adobe RGB-compliant devices, the images are displayed with low saturation.

---

[151] How to Use │ Using shooting functions │ Setting the other functions of this product

Grid Line

Sets whether the grid line is displayed or not. The grid line will help you to adjust the composition of images.

1. MENU → ⚙ (Custom Settings) → [Grid Line] → desired setting.

Menu item details

Rule of 3rds Grid:
Place main subjects close to one of the grid lines that divide the image into thirds for a well-balanced composition.
Square Grid:
Square grids make it easier to confirm the horizontal level of your composition. This is suitable to determine the quality of the composition when shooting landscape, close-up, or duplicated images.
Diag. + Square Grid:
Place a subject on the diagonal line to express an uplifting and powerful feeling.
Off (default setting):
Does not display the grid line.

---

[152] How to Use │ Using shooting functions │ Setting the other functions of this product

Auto Review

You can check the recorded image on the screen right after the shooting. You can also set the display time for Auto Review.

1. MENU → ⚙ (Custom Settings) → [Auto Review] → desired setting.

Menu item details

10 Sec/5 Sec/2 Sec (default setting):
Displays the recorded image on the screen right after shooting for the selected duration of

time. If you perform a magnifying operation during Auto Review, you can check that image using the magnified scale.

Off:

Does not display the Auto Review.

Note

- When the product is enlarging an image using image processing, it may temporarily display the original image prior to enlarging and then display the enlarged image.
- The DISP (Display Setting) settings are applied for the Auto Review display.

Live View Display

Sets whether or not to show images altered with effects of the exposure compensation, white balance, [Creative Style], or [Picture Effect] on the screen.

1. MENU → ⚙ (Custom Settings) → [Live View Display] → desired setting.

Menu item details

Setting Effect ON (default setting):

Displays Live View in conditions close to what your picture will look like as a result of applying all your settings. This setting is useful when you want to shoot pictures while checking the results of the shot on the Live View screen.

Setting Effect OFF:

Shows Live View without the effects of exposure compensation, white balance,[Creative Style], or [Picture Effect]. When this setting is used, you can easily check the image composition.

Live View is always displayed with the appropriate brightness even in [Manual Exposure] mode.

Note

- When the shooting mode is set to[Intelligent Auto], [Superior Auto], [Sweep Panorama], [Movie] or [Scene Selection], [Live View Display] cannot be set to [Setting Effect OFF].
- When [Live View Display] is set to [Setting Effect ON], you may have difficulty checking the composition, as the Live View Display may seem too dark or too bright. If such a phenomenon occurs, set [Live View Display] to [Setting Effect OFF]. When [Live View Display] is set to [Setting Effect OFF], the brightness of the shot image will not be the same as that of the displayed Live View.

Hint

- When you use a third-party flash, such as a studio flash, Live View Display may be dark for some shutter speed settings. When [Live View Display] is set to [Setting Effect OFF], Live View Display will be displayed brightly, so that you can easily check the composition.

---

[154] How to Use │ Using shooting functions │ Setting the other functions of this product

FINDER/MONITOR

Sets the method for switching the display between Electronic Viewfinder and the screen.

1. MENU → ⚙ (Custom Settings) → [FINDER/MONITOR] → desired setting.

Menu item details

Auto (default setting):
When you look into the Electronic Viewfinder, the display is switched to the Electronic Viewfinder automatically.

Viewfinder:
The screen is turned off and the image is always displayed in the Electronic Viewfinder.

Monitor:
The Electronic Viewfinder is turned off and the image is always displayed on the screen.

---

[155] How to Use │ Using shooting functions │ Setting the other functions of this product

Release w/o Lens

Sets whether or not the shutter can be released when no lens is attached.

1. MENU → ⚙ (Custom Settings) → [Release w/o Lens] → desired setting.

Menu item details

Enable (default setting):
Releases the shutter when no lens is attached. Select[Enable] when attaching the product to an astronomical telescope, etc.

Disable:

Does not release the shutter when a lens is not attached.

Note

- Correct metering cannot be achieved when you use lenses that do not provide a lens contact, such as the lens of an astronomical telescope. In such cases, adjust the exposure manually by checking it on the recorded image.

Silent Shooting

You can shoot images without the shutter sound.

1. MENU → (Custom Settings) → [Silent Shooting] → desired setting.

Menu item details

On:

You can shoot images without the shutter sound.

Off (default setting):

[Silent Shooting] is deactivated.

Note

- Use the [Silent Shooting] function on your own responsibility, while taking sufficient consideration to the privacy and portrait rights of the subject.
- Even if [Silent Shooting] is set to [On], it will not be completely silent.
- Even if [Silent Shooting] is set to [On], the operating sound of the aperture and focus will sound.
- When shooting still images using the [Silent Shooting] function with low ISO sensitivity, if you point the camera at a very bright light source, high intensity areas on the monitor may be recorded in darker tones.
- When the power is turned off, the shutter sound may beep in rare occasions. This is not a malfunction.
- Image distortion caused by the movement of the subject or the camera may occur.
- If you shoot images under instantaneous lightning or flickering lights, such as the flash light from other cameras or fluorescent lighting, a striping effect may occur on the image.
- If you want to turn off the beep that sounds when the subject is in focus or the self-timer operates, set [Audio signals] to [Off].
- Even if [Silent Shooting] is set to [On], the shutter sound may beep under the following circumstances:

- [White Balance] is set to [Custom Setup]
- [Face Registration]

- You cannot select [Silent Shooting] when the mode dial is set to other than P/A/S/M.
- When [Silent Shooting] is set to [On], the following functions are not available: Flash shooting/Auto HDR/Picture Effect/Picture Profile/ Long Exposure NR/e-Front Curtain Shut./S. Auto Img. Extract./BULB shooting/Multi Frame NR
- When shooting using a function downloaded from PlayMemories Camera Apps, [Silent Shooting] is canceled.
- The minimum value for ISO sensitivity is ISO 100.
- After you turn the camera on, the time in which you can start recording is extended by 0.5 seconds.

---

[157] How to Use | Using shooting functions | Setting the other functions of this product

e-Front Curtain Shut.

The electronic front curtain shutter function shortens the time lag between shutter releases.

1. MENU → (Custom Settings) → [e-Front Curtain Shut.] → desired setting.

Menu item details

On (default setting):
Uses the electronic front curtain shutter function.
Off:
Does not use the electronic front curtain shutter function.

Note

- When you shoot at high shutter speeds with a large diameter lens attached, the ghosting of a blurred area may occur, depending on the subject or shooting conditions. In such cases, set this function to [Off].
- When a lens made by another manufacturer (including a Minolta/Konica-Minolta lens) is used, set this function to [Off]. If you set this function to [On], the correct exposure will not be set or the image brightness will be uneven.

---

[158] How to Use | Using shooting functions | Setting the other functions of this product

S. Auto Img. Extract.

Sets whether or not to save all the images that were shot continuously in [Superior Auto].

1. MENU → ⚙ (Custom Settings) → [S. Auto Img. Extract.] → desired setting.

Menu item details

Auto (default setting):
Saves one appropriate image selected by the product.

Off:
Saves all of the images.

Note

- Even if you set [S. Auto Img. Extract.] to [Off] with [Hand-held Twilight] selected as the scene recognition mode, one combined image is saved.
- When the [Auto Obj. Framing] function is activated, two images are saved even if you set [S. Auto Img. Extract.] to [Auto].

APS-C Size Capture

This product shoots 35mm full-size image sensor pictures, but it can also shoot APS-C size equivalent sensor pictures.

1. MENU → ⚙ (Custom Settings) →[APS-C Size Capture] → desired setting.

Menu item details

On:
Captures APS-C size equivalent sensor pictures using any lens.
Auto (default setting):
Automatically sets the capture range depending on the lens.
Off:
Always captures 35mm full-size image sensor pictures.

Note

- When you set [APS-C Size Capture] to [On], the image size will change automatically.
- When you set [APS-C Size Capture] to [Off], some shooting functions may not work correctly.
- When [Record Setting] is set to [120p 50M]/[100p 50M], [APS-C Size Capture] is set to [On].

[160] How to Use | Using shooting functions | Setting the other functions of this product

Shading Comp.

Compensates for the shaded corners of the screen, caused by certain lens characteristics.

1. MENU → ⚙ (Custom Settings) → [Lens Comp.] → [Shading Comp.] → desired setting.

Menu item details

Auto (default setting):
Compensates for darker corners of the screen automatically.
Off:
Does not compensate for darker corners of the screen.

Note

- The [Shading Comp.] function is only available when an E-mount lens is mounted.
- The amount of light around the edges may not be corrected, depending on the lens type.

[161] How to Use | Using shooting functions | Setting the other functions of this product

Chro. Aber. Comp.

Reduces the color deviation at the corners of the screen, caused by certain lens characteristics.

1. MENU → ⚙ (Custom Settings) → [Lens Comp.] → [Chro. Aber. Comp.] → desired setting.

Menu item details

Auto (default setting):
Reduces the color deviation automatically.
Off:
Does not compensate for the color deviation.

Note

- The [Chro. Aber. Comp.] function is only available when an E-mount lens is mounted.

[162] How to Use | Using shooting functions | Setting the other functions of this product

Distortion Comp.

Compensates for the distortion of the screen, caused by certain lens characteristics.

1. MENU → ⚙ (Custom Settings) → [Lens Comp.] → [Distortion Comp.] → desired setting.

Menu item details

Auto:
Compensates for distortion of the screen automatically.
Off (default setting):
Does not compensate for distortion of the screen.

Note

- The [Distortion Comp.] function is only available when an E-mount lens is mounted.
- Depending on the attached lens, [Distortion Comp.] is fixed to [Auto], and you cannot select [Off].

[163] How to Use | Using shooting functions | Setting the other functions of this product

Dial / Wheel Lock

You can set whether the dial and wheel will be locked by pressing and holding the Fn (Function) button.

1. MENU → ⚙ (Custom Settings) → [Dial / Wheel Lock]→ desired setting.

Menu item details

Lock:
Locks the front dial, rear dial and control wheel.

Unlock (default setting):
Does not lock the front dial, rear dial or control wheel even if you press and hold the Fn (Function) button.

Hint

- You can release the locked dial/control wheel by holding the Fn (Function) button down.

---

[164] How to Use | Using shooting functions | Setting the other functions of this product

Deactivate Monitor

When you press the key to which the [Deactivate Monitor] function is assigned, [Live View Display] is switched to [Setting Effect OFF], and the screen display is switched to [No Disp. Info.].

1. MENU → ⚙ (Custom Settings) → [Custom Key Settings] → set the [Deactivate Monitor] function to the desired key.
2. Press the key to which [Deactivate Monitor] was assigned.

Note

- Even if you perform [Deactivate Monitor], the backlight of monitor remains on. To turn off the backlight of monitor, press the FINDER/MONITOR button.

---

[165] How to Use | Using shooting functions | Setting the other functions of this product

Aperture Preview

With the monitor or viewfinder, you may see an image with an aperture that differs from the shooting result. Since the blurring of a subject changes if the aperture is changed, the blurriness of the actual picture will differ from the image you were viewing prior to shooting. While you press and hold the key to which you assigned the [Aperture Preview] function, the aperture is stepped down to the set aperture value and you can check the blurriness prior to shooting.

1. MENU → ⚙ (Custom Settings) → [Custom Key Settings] → set the [Aperture Preview] function to the desired key.
2. Confirm the image by pressing the key to which [Aperture Preview] was assigned.

Hint

- Although you can change the aperture value during the preview, the subject may be defocused if you select a brighter aperture. We recommend that you adjust the focus again.

---

[166] How to Use │ Using shooting functions │ Setting the other functions of this product

Shot. Result Preview

With the monitor or viewfinder, you may see an image with an aperture that differs from the shooting result. Since the blurring of a subject changes if the aperture is changed, the blurriness of the actual picture will differ from the image you were viewing prior to shooting. While pressing down the key to which [Shot. Result Preview] is assigned, you can check the image preview with the DRO, shutter speed, aperture and ISO sensitivity settings applied. Check the shooting result preview before shooting.

1. MENU → ⚙ (Custom Settings) → [Custom Key Settings] → set the [Shot. Result Preview] function to the desired key.
2. Confirm the image by pressing the key to which [Shot. Result Preview] was assigned.

Hint

- The DRO settings, shutter speed, aperture and ISO sensitivity settings you have set are reflected on the image for [Shot. Result Preview], but some effects cannot be previewed depending on the shooting settings. Even in that case, the settings you have selected will be applied to the images you shoot.

---

[167] How to Use │ Viewing │ Viewing still images

Playing back images

Plays back the recorded images.

1. Press the ▶ (Playback) button to switch to the playback mode.
2. Select the image with the control wheel.

Hint

- The product creates an image database file on a memory card to record and play back images. An image that is not registered in the image database file may not be played back correctly. To play back images shot using other devices, register those images to the image database file using MENU → [Setup] → [Recover Image DB].

---

[168] How to Use | Viewing | Viewing still images

Playback zoom

Enlarges the image being played back.

1. Display the image you want to enlarge, and then press the button.
   - If the image is too large, press the button to adjust the zoom scale.
2. Select the portion you want to enlarge by pressing the top/bottom/right/left side of the control wheel.
3. Press the MENU button, or in the center of the control wheel to exit the playback zoom.

Hint

- You can also enlarge an image being played back using MENU.

Note

- You cannot enlarge movies.

---

[169] How to Use | Viewing | Viewing still images

Image Index

You can display multiple images at the same time in playback mode.

1. Press the (Image Index) button while the image is being played back.
   To change the number of images to be displayed
   MENU → (Playback) → [Image Index] → desired setting.

Menu item details

9 Images (default setting)/25 Images

To return to single-image playback

Select the desired image and press ● on the center of the control wheel.

To display a desired image quickly

Select the bar on the left of the image index screen using the control wheel, then press the top/bottom side of the control wheel. While the bar is being selected, you can display the calendar screen or folder selection screen by pressing ● in the center. In addition, you can switch View Mode by selecting an icon.

---

[170] How to Use | Viewing | Viewing still images

Switching the screen display (during playback)

Switches the screen display.

1. Press the DISP (Display Setting) button.
   - The screen display switches in the order “Display Info. →Histogram → No Disp. Info. → Display Info.” each time you press the DISP button.
   - The DISP (Display Setting) settings are applied for the Auto Review display.

Note

- The histogram is not displayed in the following situations:
  - During movie playback
  - During scrolling playback of panoramic images
  - During slideshows
  - During Folder View (MP4)
  - During AVCHD View
  - During XAVC S View

---

[171] How to Use | Viewing | Deleting images

Deleting a displayed image

You can delete an image displayed.

1. Display the image you want to delete.
2. Press the (Delete) button.
3. Select [Delete] using the control wheel, then press ● on the center of the control wheel.

---

[172] How to Use | Viewing | Deleting images

Deleting multiple selected images

You can delete multiple selected images.

1. MENU → (Playback) → [Delete] → desired setting.

Menu item details

Multiple Img.:
Deletes the selected images.
(1) Select the images to be deleted, then press ● on the center of the control wheel. The ✓ mark is displayed in the check box. To cancel the selection, press ● again to remove the ✓ mark.
(2) To delete other images, repeat step (1).
(3) MENU → [OK] → Press ● on the center.

All in this Folder:
Deletes all images in the selected folder.

All with this date:
Deletes all images in the selected date range.

Hint

- Perform [Format] to delete all images, including protected images.

Note

- The menu items that can be selected differ depending on the [View Mode] setting.

---

[173] How to Use | Viewing | Playing back movies

Playing back movies

Plays back the recorded movies.

1. Press the ▶ (playback) button to switch to playback mode.
2. Select the movie to be played back using the control wheel.
3. To play back movies, press ● on the center.

Available operations during movie playback

You can perform slow playback and sound volume adjustment, etc. by pressing the bottom side of the control wheel.

- ▶ : Playback
- ❚❚ : Pause
- ▶▶ : Fast-forward
- ◀◀ : Fast-rewind
- ❚▶ : Forward slow playback
- ◀❚ : Reverse slow playback
- ▶▶❚ : Next movie file
- ❚◀◀ : Previous movie file
- ❚❚▶ : Displays the next frame
- ◀❚❚ : Displays the previous frame
- 🔊 : Sound volume adjustment
- ↩ : Closes the operation panel

Hint

- “Forward slow playback,” “Reverse slow playback,” “Displays the next frame” and “Displays the previous frame” are available during pause.

[174] How to Use │ Viewing │ Viewing panoramic images

Playing back panoramic images

The product automatically scrolls a panoramic image from end to end.

1. Press the ▶ (playback) button to switch to playback mode.
2. Select the panoramic image to be played back using the control wheel.
3. Press ● on the center to play back the image.

- To pause playback, press ● on the center again.
- To return to the display of the entire image, press theMENU key.

Note

- Panoramic images shot using other products may be displayed in a different size from the actual size, or may not scroll correctly.

---

[175] How to Use | Viewing | Printing

Specify Printing

You can specify in advance on the memory card which still images you want to print out later.
The DPOF (print order) icon will appear on the specified images. DPOF refers to “Digital Print Order Format.”

1. MENU → ▶ (Playback) → [Specify Printing] → desired setting.

Menu item details

Multiple Img.:
Selects images to order printing.
(1) Select an image and press ● on the center of the control wheel. A ✓ mark is displayed in the check box. To cancel the selection, press ● and delete the ✓ mark.
(2) Repeat step 1 to print other images.
(3) MENU → [OK] → ● on the center.
Cancel All:
Clears all DPOF marks.
Print Setting:
You can set whether to print the date on images registered with DPOF marks.
Select [On] or [Off] → [Enter] in [Date Imprint].

Note

- You cannot add the DPOF mark to the following files:
  - Movies
  - RAW images

---

[176] How to Use │ Viewing │ Using viewing functions

View Mode

Sets the View Mode (image display method).

1. MENU → (Playback) → [View Mode] → desired setting.

Menu item details

Date View:
Displays the images by date.
Folder View(Still):
Displays only still images.
Folder View(MP4):
Displays only MP4-format movies.
AVCHD View:
Displays only AVCHD-format movies.
XAVC S View:
Displays only XAVC S-format movies.

---

[177] How to Use │ Viewing │ Using viewing functions

Display Rotation

Selects the orientation when playing back recorded still images.

1. MENU → (Playback) → [Display Rotation] → desired setting.

Menu items details

Auto:
The image is displayed according to the orientation information of the image. You can rotate the image using the rotation function. Even if the product is tilted, the display orientation is maintained.

Manual:
The image is displayed according to the orientation information of the image. You can rotate the image using the rotation function.
Off:
Always displays in landscape orientation.

---

[178] How to Use │ Viewing │ Using viewing functions

Slide Show

Automatically plays back images continuously.

1. MENU → (Playback) → [Slide Show] → desired setting.
2. Select [Enter].

Menu item details

Repeat:
Select [On], in which images are played back in a continuous loop, or [Off] (default setting), in which the product exits the slideshow when all the images are played back once.
Interval:
Select the display interval for images from among [1 Sec], [3 Sec] (default setting), [5 Sec], [10 Sec] or [30 Sec].

To quit the slideshow in the middle of playback

Press the MENU key to quit the slideshow. You cannot pause the slideshow.

Hint

- You can activate a slideshow only when [View Mode] is set to [Date View] or [Folder View(Still)].

---

[179] How to Use │ Viewing │ Using viewing functions

Rotate

Rotates a recorded still image counter-clockwise.

1. MENU → (Playback) → [Rotate].

2. Press ● on the center of the control wheel.
   The image is rotated counter-clockwise. The image rotates as you press ● on the center. If you rotate the image once, the image remains rotated even after the product is turned off.

Note

- You cannot rotate the movies.
- You may not be able to rotate images shot using other products.
- When viewing rotated images on a computer, the images may be displayed in their original orientation depending on the software.

Protect

Protects recorded images against accidental erasure. The mark is displayed on protected images.

1. MENU → (Playback) → [Protect] → desired setting.

Menu item details

Multiple Img.:
Applies or cancels the protection of the selected multiple images.
(1) Select the image to be protected, then press ● on the center of the control wheel. The ✓ mark is displayed in the check box. To cancel the selection, press ● again to remove the ✓ mark.
(2) To protect other images, repeat step (1).
(3) MENU → [OK] → Press ● on the center.

All in this Folder:
Protects all images in the selected folder.

All with this date:
Protects all images in the selected date range.

Cancel All in this Folder:
Cancels the protection of all images in the selected folder.

Cancel All with this date:
Cancels the protection of all images in the selected date range.

Note

- The menu items that can be selected differ depending on the [View Mode] setting.

---

[181] How to Use | Viewing | Using viewing functions

4K Still Image PB

Outputs still images in 4K resolution to an HDMI-connected TV that supports 4K.

1. Turn off this product and the TV.
2. Connect the HDMI micro terminal of this product to the HDMI jack of the TV using an HDMI cable (sold separately).

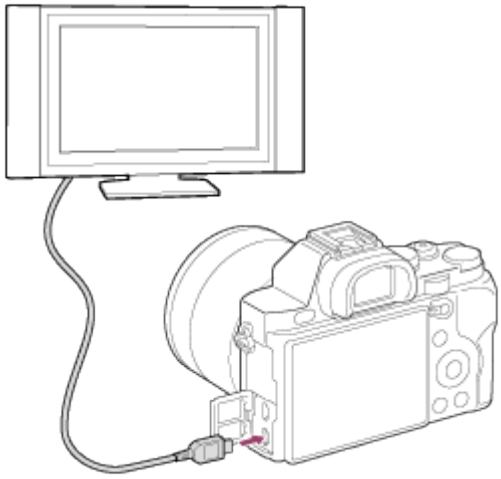

3. Turn on the TV and switch the input.
4. Turn on this product.
5. Play back a still image, then press the bottom of the control wheel.
   The still image is output in 4K resolution.
   - You can output still images in 4K resolution by selecting MENU → ▶ (Playback) → [4K Still Image PB] → [OK].

Note

- This menu is only available with 4K-compatible TVs. For details, refer to the operating instructions of the TV.

---

[182] How to Use | Viewing | Viewing images on a TV

Viewing images on an HD TV

To view images stored on this product using a TV, an HDMI cable (sold separately) and an HD TV equipped with an HDMI jack are required.

1. Turn off both this product and the TV.
2. Connect the HDMI micro terminal of this product to the HDMI jack of the TV using an HDMI cable (sold separately).

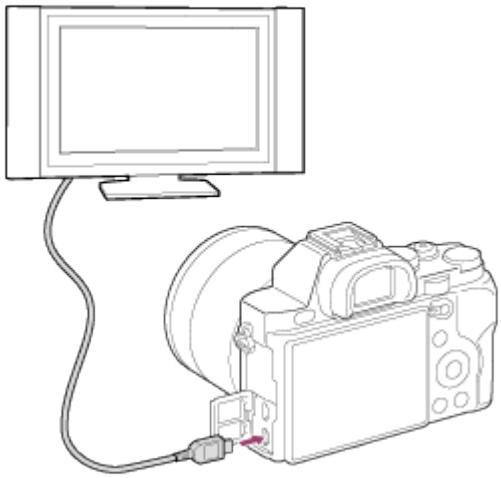

3. Turn on the TV and switch the input.
4. Turn on this product.
   Images shot with the product appear on the TV screen.

Hint

- This product is compatible with the PhotoTV HD standard. If you connect Sony PhotoTV HD-compatible devices using an HDMI cable (sold separately), the TV is set to the image quality suitable for viewing still images, and a whole new world of photos can be enjoyed in breathtaking high quality.
- The PhotoTV HD allows for a highly-detailed, photo-like expression of subtle textures and colors.
- For details, refer to the operating instructions supplied with the compatible TV.

Note

- Do not connect this product and another device using the output terminals of both. Doing so may cause a malfunction.
- Some devices may not work properly when connected to this product. For example, they may not output video or audio.
- Use an HDMI cable with the HDMI logo or a genuine Sony cable.
- Use an HDMI cable that is compatible with the HDMI micro terminal of the product and the HDMI jack of the TV.

- When [TC Output] is set to [On], the image may not be output properly to the TV or recording device. In such cases, set [TC Output] to [Off].

[183] How to Use | Viewing | Viewing images on a TV

Viewing images on a “BRAVIA” Sync-compatible TV

By connecting this product to a TV that supports “BRAVIA” Sync using an HDMI cable (sold separately), you can operate this product with the TV Remote Control.

1. Turn off both this product and the TV.
2. Connect the HDMI micro terminal of the product to the HDMI jack of the TV using an HDMI cable (sold separately).

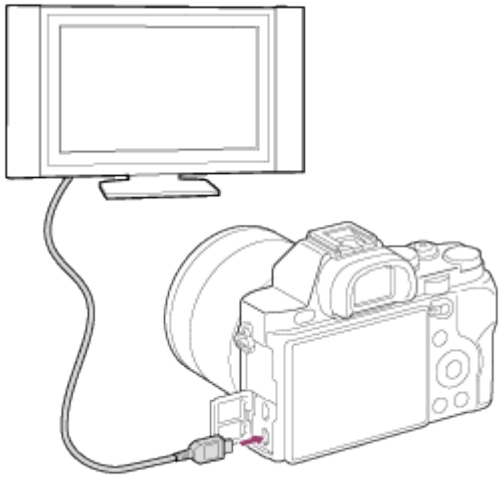

3. Turn on the TV and switch the input.
4. Turn on this product.
5. MENU → (Setup) → [HDMI Settings] → [CTRL FOR HDMI] → [On].
6. Press the SYNC MENU button on the TV Remote Control, and select the desired mode.

Note

- If the product is not in playback mode, press the (Playback) button.
- Only TVs that support “BRAVIA” Sync can provide SYNC MENU operations. For details, refer to the operating instructions supplied with the TV.
- If the product performs unwanted operations in response to the TV Remote Control when the product is connected to another manufacturer’s TV using an HDMI connection, select MENU → (Setup) → [HDMI Settings] → [CTRL FOR HDMI] → [Off].

Monitor Brightness

You can adjust the brightness of the screen.

1. MENU → (Setup) → [Monitor Brightness] → desired setting.

Menu item details

Manual (default setting):
Adjusts the brightness within the range of –2 to +2.
Sunny Weather:
Sets the brightness appropriately for shooting outdoors.

Note

- The [Sunny Weather] setting is too bright for shooting indoors. Set [Monitor Brightness] to [Manual] for indoor shooting.

Viewfinder Bright.

When using an electronic viewfinder, this product adjusts the brightness of the electronic viewfinder according to the surrounding environment.

1. MENU → (Setup) → [Viewfinder Bright.] → desired setting.

Menu item details

Auto (default setting):
Adjusts the brightness of the electronic viewfinder automatically.

Manual:

Selects the brightness of the electronic viewfinder from the range –2 to +2.

Note

- When you use the AC adaptor AC-PW20 (sold separately) when the setting is[Auto], the viewfinder is always set to the brightest setting.

[186] How to Use │ Changing settings │ Setup menu

Finder Color Temp.

Adjusts the color temperature of the electronic viewfinder.

1. MENU → (Setup) → [Finder Color Temp.] → desired setting.

Menu item details

-2 to +2:

When you select “-,” the viewfinder screen changes to a warmer color, and when you select “+,” it changes to a colder color.

[187] How to Use │ Changing settings │ Setup menu

Volume Settings

Adjusts the sound volume.

1. MENU → (Setup) → [Volume Settings] → desired setting.

Adjusting the volume during playback

Press the bottom of the control wheel while playing back movies to display the operation panel, then adjust the volume. You can adjust the volume while listening to the actual sound.

[188] How to Use │ Changing settings │ Setup menu

Audio signals

Selects whether the product produces a sound or not.

1. MENU → (Setup) → [Audio signals] → desired setting.

Menu item details

On (default setting):
Sounds are produced for example when the focus is achieved by pressing the shutter button halfway down.
Off:
Sounds are not produced.

Upload Settings(Eye-Fi)

Sets whether to use the upload function when using an Eye-Fi card (commercially available). This item appears when an Eye-Fi card is inserted into the product's memory card slot.

1. MENU → (Setup) → [Upload Settings] → desired setting.
2. Set your Wi-Fi network or destination on the Eye-Fi card.
   For details, refer to the manual supplied with the Eye-Fi card.
3. Insert the Eye-Fi card you have set up into the product, and shoot still images.
   Images are transferred to your computer, etc., automatically via the Wi-Fi network.

Menu item details

On (default setting):
Enables the upload function.
Off:
Disables the upload function
Communication status screen display
: Standby. No images are to be sent.
: Upload standby.
: Connecting.
: Uploading.
: Error

Note

- Eye-Fi cards are only sold in certain countries/regions.
- For more information on Eye-Fi cards, please contact the manufacturer or vendor directly.
- Eye-Fi cards can be used only in the countries/regions where they were purchased. Use Eye-Fi cards in accordance with the law of the countries/regions where you purchased the card.
- Eye-Fi cards are equipped with a wireless LAN function. Do not insert an Eye-Fi card into the product in locations in which their use is prohibited, such as on an airplane. When an

Eye-Fi card is inserted into the product, set [Upload Settings] to [Off]. When the upload function is set to [Off], the OFF indicator will be displayed on the product.
- Power save mode will not function during uploading.
- If (error) is displayed, remove the memory card and reinsert it, or turn the product off and then on again. If the indicator appears again, the Eye-Fi card may be damaged.
- Wireless LAN communication may be influenced by other communication devices. If the communication status is poor, move closer to the access point to be connected.
- This product does not support Eye-Fi “Endless Memory Mode.” Before using an Eye-Fi card, be sure that “Endless Memory Mode” is turned off.

---

[190] How to Use │ Changing settings │ Setup menu

Tile Menu

Selects whether to always display the first screen of the menu when you press the MENU button.

1. MENU → (Setup) → [Tile Menu] → desired setting.

Menu item details

On:
Always displays the first screen of the menu (Tile Menu).

Off (default setting):
Deactivates the Tile Menu display.

---

[191] How to Use │ Changing settings │ Setup menu

Mode Dial Guide

You can display the description of a shooting mode when you turn the mode dial and change the settings available for that shooting mode.

1. MENU → (Setup) → [Mode Dial Guide] → desired setting.

Menu item details

On:
Displays the Mode Dial Guide.

Off (default setting):
Does not display the Mode Dial Guide.

---

[192] How to Use | Changing settings | Setup menu

Delete confirm.

You can set whether [Delete] or [Cancel] is selected as the default setting on the delete confirmation screen.

1. MENU → (Setup) → [Delete confirm.] → desired setting.

Menu item details

"Delete" first:
[Delete] is selected as the default setting.
"Cancel" first (default setting):
[Cancel] is selected as the default setting.

---

[193] How to Use | Changing settings | Setup menu

Display Quality

You can change the display quality.

1. MENU → (Setup) → [Display Quality] → desired setting.

Menu item details

High:
Displays in high quality.
Standard:
Displays in standard quality.

Note

- When [High] is set, battery consumption will be higher than when[Standard] is set.

---

[194] How to Use | Changing settings | Setup menu

Pwr Save Start Time

You can set time intervals to automatically switch to power save mode. To return to shooting mode, perform an operation such as pressing the shutter button halfway down.

1. MENU → (Setup) → [Pwr Save Start Time] → desired setting.

Menu item details

30 Min/5 Min/2 Min/1 Min (default setting)/10 Sec

Note

- Turn off the product when you do not use it for a long time.
- The power save function is not activated during playing back slideshow or recording movies, or when connected to a computer.

[195] How to Use | Changing settings | Setup menu

PAL/NTSC Selector

Plays back movies recorded with the product on a PAL/NTSC system TV.

1. MENU → (Setup) → [PAL/NTSC Selector] → [Enter]

Note

- This function is provided with 1080 50i-compatible devices only. It is not provided with 1080 60i-compatible devices. The 1080 50i-compatible devices have a “50i” mark on the bottom of the product.
- If you insert a memory card that has previously been formatted with the PAL system, a message telling you that you must re-format the card appears. When you record using the NTSC system, re-format the memory card or use another memory card.
- When the NTSC mode is selected, the ‘Running on NTSC.” message always appears on the start-up screen each time you turn the product on.

[196] How to Use | Changing settings | Setup menu

Cleaning Mode

Allows you to clean the image sensor.

1. Confirm that the battery has been charged sufficiently.
2. MENU → (Setup) → [Cleaning Mode] → [Enter]
3. Turn off the product following the instructions on the screen.
4. Detach the lens.
5. Use the blower to clean the image sensor surface and the surrounding area.
6. Attach the lens.

Note

- A blower is not supplied with this product. Use a commercially available blower.
- Cleaning can be performed only when the battery level is (3 remaining battery icons) or more. The use of an AC-PW20 AC Adaptor is recommended.
- Do not use a spray type blower as it may scatter water droplets inside the camera body.
- Do not put the tip of a blower into the cavity beyond the lens mount area, so that the tip of the blower does not touch the image sensor.
- Hold the camera slightly face downward so that the dust falls out.
- Do not subject the product to any shock during cleaning.
- When cleaning the image sensor with a blower, do not blow too hard. If you blow the sensor too hard, the inside of the product may be damaged.
- If the dust remains even after you cleaned the product as described, consult the service facility.

[197] How to Use | Changing settings | Setup menu

Demo Mode

The [Demo Mode] function displays the movies recorded on the memory card automatically (demonstration), when the camera has not been operated for a certain time.
Normally select [Off].

1. MENU → (Setup) → [Demo Mode] → desired setting.

Menu item details

On:
The movie playback demonstration starts automatically if the product is not operated for about one minute. Only protected AVCHD movies are played back.
Set the view mode to [AVCHD View], and protect the movie file with the oldest recorded date and time.
Off (default setting):
Does not show the demonstration.

Note

- You can set this item only when the product is powered by the AC-PW20 AC Adaptor (sold separately).
- Even if [On] is selected, the product does not start a demonstration if there is no movie file on the memory card.
- When [On] is selected, the product does not switch to power save mode.

---

[198] How to Use | Changing settings | Setup menu

TC/UB Settings

The time code (TC) and the user bit (UB) information can be recorded as data attached to movies.

1. MENU→ (Setup) → [TC/UB Settings] → setting value you want to change.

Menu item details

TC/UB Disp. Setting:
Sets the display for the counter, time code, and user bit.

TC Preset:
Sets the time code.

UB Preset:
Sets the user bit.

TC Format:
Sets the recording method for the time code.

TC Run:
Sets the count up format for the time code.

TC Make:
Sets the recording format for the time code on the recording medium.

UB Time Rec:

Sets whether or not to record the time as a user bit.

How to set the time code (TC Preset)

1. MENU→ (Setup) → [TC/UB Settings] → [TC Preset], then press ● in the center of the control wheel.
2. Turn the control wheel and select the first two digits.
   - The time code can be set between the following range.
     When [60i] is selected: 00:00:00:00 to 23:59:59:29

     *When [24p] is selected, you can select the last two digits of the time code in multiples of four from 0 to 23 frames.
     When [50i] is selected: 00:00:00:00 to 23:59:59:24
3. Set the other digits following the same procedure as in step 2, then press● in the center of the control wheel.

How to reset the time code

Reset the time code using the infrared remote control RMT-845 (sold separately), which is available at Sony service facilities.

- Only the following settings can be changed using the RMT-845. You cannot perform any other operations.
  - Reset time code
  - Start/stop movie recording

How to set the user bit (UB Preset)

1. MENU→ (Setup) → [TC/UB Settings] → [UB Preset], then press ● in the center of the control wheel.
2. Turn the control wheel and select the first two digits.
3. Set the other digits following the same procedure as in step 2, then press● in the center of the control wheel.

How to reset the user bit

1. MENU → (Setup) → [TC/UB Settings] → [UB Preset], then press ● in the center of the control wheel.
2. Press the (Delete) button to reset the user bit (00 00 00 00).

How to select the recording method for the time code (TC Format)

1. MENU→ (Setup) → [TC/UB Settings] → [TC Format], then press ● in the center of the control wheel.

DF:

Records the time code in Drop Frame* format.

NDF:

Records the time code in Non-Drop Frame format.

*The time code is based on 30 frames per second. However, a gap between the actual time and the time code will occur during extended periods of recording as the frame frequency of the NTSC image signal is approximately 29.97 frames per second. Drop frame corrects this gap to make the time code and actual time equal. In drop frame, the first 2 frame numbers are removed every minute except for every tenth minute. The time code without this correction is called non-drop frame.

- The setting is fixed to [NDF] when recording in 1080/24p.

How to select the count up format for the time code (TC Run)

1. MENU→ (Setup) → [TC/UB Settings] → [TC Run], then press ● in the center of the control wheel.

Rec Run:

Sets the stepping mode for the time code to advance only while recording. The time code is recorded sequentially from the last time code of the previous recording.

Free Run:

Sets the stepping mode for the time code to advance anytime, regardless of the camera operation.

- The time code may not be recorded sequentially in the following situations even when the time code advances in [Rec Run] mode.
  - When the recording format is changed.
  - When the recording medium is removed.

How to select how the time code is recorded (TC Make)

1. MENU→ (Setup) → [TC/UB Settings] → [TC Make], then press ● in the center of the control wheel.

Preset:

Records the newly set time code on the recording medium.

Regenerate:

Reads the last time code for the previous recording from the recording medium and records the new time code consecutively from the last time code. The time code advances in [Rec Run] mode regardless of the [TC Run] setting.

Remote Ctrl

You can operate this product and shoot images using the SHUTTER button, 2SEC button (2 second delay shutter), and START/STOP button (or Movie button (RMT-DSLR2 only)) on the

RMT-DSLR1 Wireless Remote Commander (sold separately) and RMT-DSLR2 (sold separately). Refer also to the operating instructions for the Wireless Remote Commander.

1. MENU → (Setup) → [Remote Ctrl] → desired setting.

Menu item details

On:
Allows Wireless Remote Commander operation.
Off (default setting):
Does not allow Wireless Remote Commander operation.

Note

- The RMT-DSLR1 Wireless Remote Commander cannot be used for movie recording.
- The lens or lens hood may block the remote sensor that receive the signals. Use the Wireless Remote Commander in the position from which the signal can reach the product.
- When [Remote Ctrl] is set to [On], the product does not switch to power save mode. Set [Remote Ctrl] to [Off] after using a Wireless Remote Commander.

HDMI Resolution

When you connect the product to a High Definition (HD) TV with HDMI terminals using an HDMI cable (sold separately), you can select HDMI Resolution to output images to the TV.

1. MENU → (Setup) → [HDMI Settings] → [HDMI Resolution] → desired setting.

Menu item details

Auto (default setting):
The product automatically recognizes an HD TV and sets the output resolution.
1080p:
Outputs signals in HD picture quality (1080p).
1080i:
Outputs signals in HD picture quality (1080i).

Note

- If the images are not displayed properly using the[Auto] setting, select either [1080i] or [1080p], based on which TV is to be connected.

24p/60p Output (movie) (Only for 1080 60i compatible models)

Sets the output format when connecting via HDMI and[Record Setting] is set to [60p 28M(PS)], [24p 24M(FX)], [24p 17M(FH)], [60p 50M] or [24p 50M].

1. MENU → (Setup) → [HDMI Settings] → [HDMI Resolution] → [1080p].
2. MENU → (Setup) → [HDMI Settings] → [24p/60p Output] → desired setting.

Menu item details

60p (default setting):
Movies are output as 60p.

24p:
Movies are output as 24p.

CTRL FOR HDMI

When connecting this product to a “BRAVIA” Sync-compatible TV using an HDMI cable (sold separately), you can operate this product by aiming the TV remote control at the TV.

1. MENU → (Setup) → [HDMI Settings] → [CTRL FOR HDMI] → desired setting.

Menu item details

On (default setting):
You can operate this product with a TV’s remote control.
Off:
You cannot operate this product with a TV’s remote control.

Note

- [CTRL FOR HDMI] is available only with a “BRAVIA” Sync-compatible TV.

HDMI Info. Display

Selects whether to display the shooting information when this product and the TV are connected using an HDMI cable (sold separately).

1. MENU → (Setup) → [HDMI Settings] → [HDMI Info. Display] → desired setting.

Menu item details

On (default setting):
Displays the shooting information of the played back image.
Off:
Does not display the shooting information of the played back image.

Note

- When recording movies that are output via HDMI to a recorder, set [Audio Out Timing] to [Lip Sync] to prevent a time lag between the video and audio.

TC Output (movie)

Sets whether or not to layer the TC (time code) information on the output signal via the HDMI terminal when outputting the signal to other professional-use devices.
This function layers the time code information on the HDMI output signal. The product sends the time code information as digital data, not as an image displayed on the screen. The connected device can then refer to the digital data to recognize the time data.

1. MENU → (Setup) → [HDMI Settings] → [TC Output] → desired setting.

Menu item details

On:
Time code is output to other devices.

Off (default setting):
Time code is not output to other devices.

Note

- When [TC Output] is set to [On], the image may not be output properly to the TV or

recording device. In such cases, set [TC Output] to [Off].

---

[205] How to Use | Changing settings | Setup menu

REC Control (movie)

If you connect the camera to an external recorder, you can remotely command the recorder to start/stop recording using the camera.

1. MENU → (Setup) → [HDMI Settings] → [REC Control] → desired setting.

Menu item details

On:

STBY The camera can send a recording command to an external recorder.
REC The camera is sending a recording command to an external recorder.

Off (default setting):

The camera is not able to send a command to an external recorder to start/stop recording.

Note

- When [TC Output] is [Off], [REC Control] is set to [Off].
- Even when REC is displayed, if the external recorder is not ready for recording (for example, if there is no capacity on the recording medium, or there is not enough battery remaining, or the camera is not connected to the device properly), recording on the external recorder may fail. When recording on an external recorder, confirm that the external recorder is recording video properly.

---

[206] How to Use | Changing settings | Setup menu

HDMI 4K Output (movie)

Sets the HDMI output when connecting to recorders that support4K.

1. Set the mode dial to (Movie).
2. Connect the camera and the device to be connected via an HDMI cable.
3. MENU→ (Setup) → [HDMI 4K Output] → desired setting.

Menu item details

Off (default setting):

4K video is not output.

24p (Only for 1080 60i compatible models):

4K video is output in 24p format.

30p/25p:

4K video is output in 30p/25p format.

Note

- When outputting 4K video, you cannot record movies on the recording medium.
- When outputting 4K video, the counter on the screen does not increase.
- When outputting 4K video, the HDMI Info. will not be displayed.
- This function is only available when the product is connected to a recorder that supports 4K.
- This function is only available in movie recording mode.
- If you use this function when recording in APS-C size, the video is up-converted to4K output.

USB Connection

Selects the appropriate USB connection method for each computer or USB device connected to this product.

1. MENU → (Setup) → [USB Connection] → desired setting.

Menu item details

Auto (default setting):

Establishes a Mass Storage or MTP connection automatically, depending on the computer or other USB devices to be connected. Windows 7 or Windows 8 computers are connected in MTP, and their unique functions are enabled for use.

Mass Storage:

Establishes a Mass Storage connection between this product, a computer, and other USB devices.

MTP:

Establishes an MTP connection between this product, a computer, and other USB devices. Windows 7 or Windows 8 computers are connected in MTP, and their unique functions are

enabled for use.

PC Remote:

Uses “Remote Camera Control” to control this product from the computer, including such functions as shooting and storing images on the computer.

Note

- If Device Stage* is not displayed with Windows 7 or Windows 8, set [USB Connection] to [Auto].

* Device Stage is a menu screen used to manage connected devices, such as a camera (Function of Windows 7 or Windows 8).

---

[208] How to Use | Changing settings | Setup menu

USB LUN Setting

Enhances compatibility by limiting of USB connection functions.

1. MENU → (Setup) → [USB LUN Setting] → desired setting.

Menu item details

Multi (default setting):

Normally, use [Multi].

Single:

Set [USB LUN Setting] to [Single] only if you cannot make a connection.

---

[209] How to Use | Changing settings | Setup menu

Language

Selects the language to be used in the menu items, warnings and messages.

1. MENU → (Setup) → [Language] → desired language.

---

[210] How to Use | Changing settings | Setup menu

Date/Time Setup

Sets the date and time again.

1. MENU → (Setup) → [Date/Time Setup] → desired setting.

Menu item details

Daylight Savings:
Selects Daylight Savings [On]/[Off].
Date/Time:
Sets the date and time.
Date Format:
Selects the date and time display format.

[211] How to Use | Changing settings | Setup menu

Area Setting

Sets the area where you are using the product.

1. MENU → (Setup) → [Area Setting] → desired area.

[212] How to Use | Changing settings | Setup menu

Format

Formats (initializes) the memory card. When you use a memory card with this product for the first time, it is recommended that you format the card using the product for stable performance of the memory card. Note that formatting permanently erases all data on the memory card, and is unrecoverable. Save valuable data on a computer, etc.

1. MENU → (Setup) → [Format].

Note

- Formatting permanently erases all data including even protected images.

[213] How to Use | Changing settings | Setup menu

File Number

Selects how to assign file numbers to recorded still images or MP4 movies.

1. MENU → (Setup) → [File Number] → desired setting.

Menu item details

Series (default setting):
Even if you change the recording destination folder or change the memory card, the product continues to assign numbers to files in sequence.
(If there is a larger file number on the new memory card than the latest image file, a number one higher than the largest number is assigned.)
Reset:
The product resets numbers when a file is recorded in a new folder and assigns numbers to files starting with “0001.”
(When the recording folder contains a file, a number one higher than the largest number is assigned.)

[214] How to Use | Changing settings | Setup menu

Select REC Folder

You can change the recording folder to which still images or MP4 movies are recorded.

1. MENU → (Setup) → [Select REC Folder] → desired folder.

Note

- You cannot select the folder when you select the [Date Form] setting.

[215] How to Use | Changing settings | Setup menu

New Folder

Creates a new folder on the memory card to which still images or MP4 movies are recorded. A new folder is created with a folder number one greater than the largest folder number currently used. Images are recorded in the newly created folder. A folder for still images and a folder for MP4 movies that have the same number are created at the same time.

1. MENU → (Setup) → [New Folder].

Note

- When you insert a memory card that was used with other equipment into this product and shoot images, a new folder may be automatically created.
- Up to 4,000 images in total can be stored in one folder. When the folder capacity is exceeded, a new folder may be automatically created.

---

[216] How to Use | Changing settings | Setup menu

Folder Name

Still images you shoot are recorded in a folder that is automatically created under the DCIM folder on the memory card. You can change the way folder names are assigned.

1. MENU → (Setup) → [Folder Name] → desired setting.

Menu item details

Standard Form (default setting):
The folder name form is as follows: folder number + MSDCF.
Example: 100MSDCF
Date Form:
The folder name form is as follows: folder number + Y (the last digit)/MM/DD.
Example: 10040405 (Folder number: 100, date: 04/05/2014)

Note

- The MP4 movie folder form is fixed as “folder number + ANV01”.

---

[217] How to Use | Changing settings | Setup menu

Recover Image DB

If image files were processed on a computer, problems may occur in the image database file. In such cases, the images on the memory card will not be played back on this product. If these problems happen, repair the file using [Recover Image DB].

1. MENU → (Setup) → [Recover Image DB] → [Enter].

Note

- Use a sufficiently charged battery pack. Low battery power during repairing can cause damage to data.

---

[218] How to Use | Changing settings | Setup menu

Display Media Info.

Displays the recordable time of movies and the number of recordable still images for the inserted memory card.

1. MENU → (Setup) → [Display Media Info.].

---

[219] How to Use | Changing settings | Setup menu

Version

Displays the software version of this product, lens and Mount Adaptor.

1. MENU → (Setup) → [Version].

---

[220] How to Use | Changing settings | Setup menu

Certification Logo (Overseas model only)

Displays some of the certification logos for this product.

1. MENU → (Setup) → [Certification Logo].

---

[221] How to Use │ Changing settings │ Setup menu

Setting Reset

Resets the product to the default settings. Even if you perform [Setting Reset], the recorded images are retained.

1. MENU → (Setup) → [Setting Reset] → desired setting.

Menu item details

Camera Settings Reset:
Initializes the main shooting settings to the default settings.
Initialize:
Initializes all the settings to the default settings.

Note

- Be sure not to eject the battery pack while resetting.
- When you perform [Initialize], downloaded applications on the product may be uninstalled. To use these applications again, re-install them.
- The value set with [AF Micro Adj.] will not be reset even when [Camera Settings Reset] or [Initialize] is performed.

---

[222] How to Use │ Using Wi-Fi functions │ Connecting this product and a Smartphone

PlayMemories Mobile

To use [Smart Remote Embedded] or [Send to Smartphone], etc., the application PlayMemories Mobile should be installed on your smartphone.

Download and install the application PlayMemories Mobile from your smartphone's application store. If PlayMemories Mobile is already installed on your smartphone, be sure to update it to the latest version.
For details on PlayMemories Mobile, refer to the support page (http://www.sony.net/pmm/).

Connecting an Android smartphone to this product

1. Launch PlayMemories Mobile on your smartphone.
2. Select the model name of this product (DIRECT-xxxx: xxxx).

3. Input the password that is displayed on this product.

The smartphone is connected to the product.

Connecting the product to an iPhone or iPad

1. Select the model name of this product (DIRECT-xxxx: xxxx) on the Wi-Fi setting screen of your iPhone or iPad.

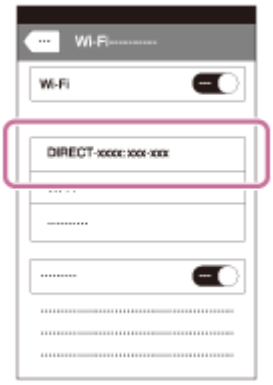

2. Input the password displayed on this product.

The iPhone or iPad is connected to the product.

3. Confirm that your iPhone or iPad was connected to the “SSID” shown on this product.

4. Return to the “Home” screen and launch PlayMemories Mobile.

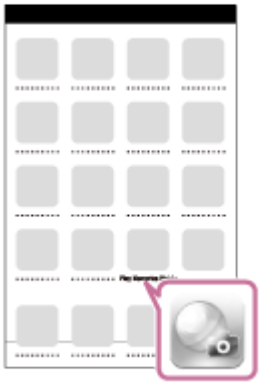

[225] How to Use │ Using Wi-Fi functions │ Connecting this product and a Smartphone

Calling up an application using [One-touch(NFC)]

You can call up a desired application from the application menu of this product by touching an NFC-enabled Android smartphone to the product. If the application you call up has a feature that works with the smartphone, the product and the smartphone will be connected via Wi-Fi. To use this function, register the desired application in advance.

1. MENU → (Wireless) → [One-touch(NFC)] → desired application.
2. Switch this product to shooting mode, then touch an NFC-enabled smartphone to the (N mark) on the product for 1-2 seconds.
   - PlayMemories Mobile launches on the smartphone, and the application you have registered launches on this product.

Note

- When the product is in playback mode, the registered application will not launch even if you touch the smartphone to the product.
- When you call up an application with one touch, even if that application does not work with a smartphone, PlayMemories Mobile on smartphone will launch. Exit PlayMemories Mobile without performing an operation. If you do not exit PlayMemories Mobile, the smartphone stays in standby connection status.

[226] How to Use │ Using Wi-Fi functions │ Controlling this product using a Smartphone

Smart Remote Embedded

You can use a smartphone as the remote controller for this product, and shoot still images/movies. Still images/movies shot via remote control are sent to the smartphone from the product. The application PlayMemories Mobile must be installed on your smartphone.

1. MENU → (Application) → [Application List] → [Smart Remote Embedded].
2. When the product is ready for the connection, an information screen appears on the product. Connect the smartphone and the product using that information.
   - Connection setting methods differ among smartphones.

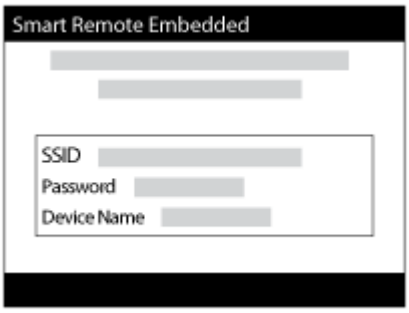

3. Check the composition of the image on the smartphone screen, and then press the shutter button **(A)** on the smartphone to shoot an image.
   - Use button **(B)** to change settings such as [EV], [Self-Timer] and [Review Check].

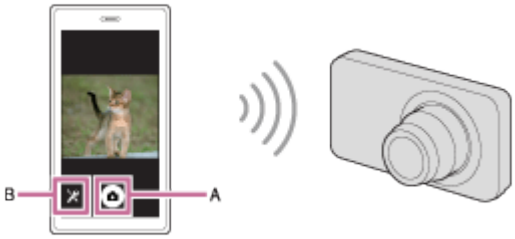

Note

- When you record movies using a smartphone as a remote controller, the monitor of the product becomes darker. Also, you cannot use the viewfinder for movie recording.
- This product shares the connection information for [Smart Remote Embedded] with a device that has permission to connect. If you want to change the device that is permitted to connect to the product, reset the connection information by following these steps. MENU → (Wireless) → [SSID/PW Reset]. After resetting the connection information, you must register the smartphone again.
- Depending on future version upgrades, the operational procedures or screen displays are subject to change without notice.

---

[227] How to Use │ Using Wi-Fi functions │ Controlling this product using a Smartphone

One-touch connection with an NFC-enabled Android smartphone (NFC One-touch remote)

You can connect this product and an NFC-enabled Android smartphone with one touch, without performing a complex setup operation.

1. Activate the NFC function of the smartphone.

2. Switch this product to shooting mode.

- The NFC function is available only when the (N mark) is displayed on the screen.

3. Touch the product to the smartphone.

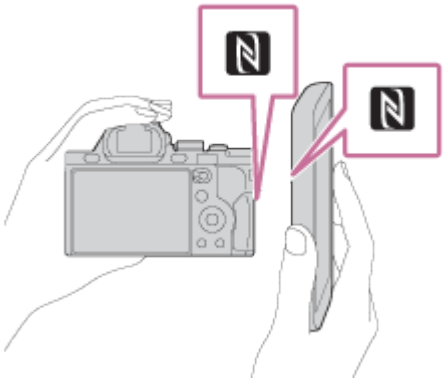

The smartphone and the product are connected, and PlayMemories Mobile launches on the smartphone.

- Touch the smartphone to the product for 1-2 seconds until PlayMemories Mobile launches.

About “NFC”

NFC is a technology that enables short-range wireless communication between various devices, such as mobile phones or IC tags, etc. NFC makes data communication simpler with just a touch on the designated touch-point.

- NFC (Near Field Communication) is an international standard of short-range wireless communication technology.

Note

- If you cannot make a connection, do as the following:
  - Launch PlayMemories Mobile on your smartphone, and then move the smartphone slowly toward the (N mark) of this product.
  - If the smartphone is in a case, remove it.
  - If the product is in a case, remove it.
  - Check whether the NFC function is activated on your smartphone.
- When [Airplane Mode] is set to [On], you cannot connect this product and the smartphone. Set [Airplane Mode] to [Off].
- If this product and the smartphone are connected when the product is in playback mode, the displayed image is sent to the smartphone.

Send to Smartphone

You can transfer still images to a smartphone and view them. The application PlayMemories Mobile must be installed on your smartphone.

1. MENU → (Wireless) → [Send to Smartphone] → desired setting.
   - If you press the (Send to Smartphone) button in playback mode, the setting screen for [Send to Smartphone] will appear.

2. If the product is ready for the transfer, the information screen appears on the product. Connect the smartphone and the product using that information.
   - The setting method for connecting the smartphone and the product varies depending on the smartphone.

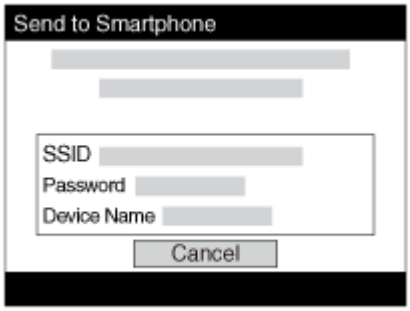

Menu item details

Select on This Device:
Selects an image on the product to be transferred to the smartphone.
(1) Select from among [This Image], [All Images on This Date] or [Multiple Images].
(2) If you select [Multiple Images], select the desired images using ● on the control wheel, then press MENU → [Enter].
Select on Smartphone:
Displays all images recorded on the product's memory card on the smartphone.

Note

- You can select an image size to be sent to the smartphone from[Original], [2M] or [VGA]. To change the image size, refer to the following steps.
  - For Android smartphone
    Start PlayMemories Mobile, and change the image size by [Settings] → [Copy Image Size].
  - For iPhone/iPad
    Select PlayMemories Mobile in the setting menu, and change the image size by [Copy Image Size].
- Some images may not be displayed on the smartphone depending on the recording format.
- RAW images are converted to JPEG format when they are sent.
- You cannot send XAVC S or AVCHD format movies.
- This product shares the connection information for[Send to Smartphone] with a device that has permission to connect. If you want to change the device that is permitted to

connect to the product, reset the connection information by following these steps. MENU → [Wireless] → [SSID/PW Reset]. After resetting the connection information, you must register the smartphone again.

- When [Airplane Mode] is set to [On], you cannot connect this product and the smartphone. Set [Airplane Mode] to [Off].

---

[229] How to Use │ Using Wi-Fi functions │ Transferring images to a Smartphone

Sending images to an Android smartphone (NFC One-touch Sharing)

With just one touch, you can connect this product and an NFC-enabled Android smartphone, and send an image displayed on the product screen directly to the smartphone. For movies, you can only transfer MP4 movies recorded with [File Format] set to [MP4].

1. Activate the NFC function of the smartphone.
2. Display a single image on the product.
3. Touch the smartphone to the product.

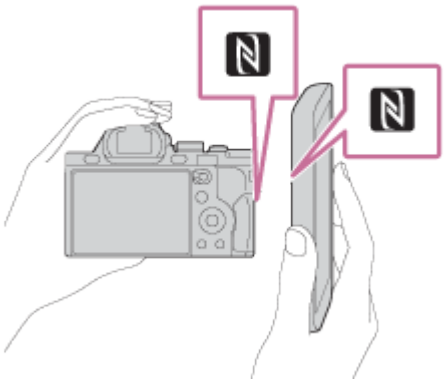

The product and the smartphone are connected, and PlayMemories Mobile automatically launches on the smartphone, and then the displayed image is sent to the smartphone.

- Before you touch the smartphone, cancel the sleep and lock-screen functions of the smartphone.
- The NFC function is available only when the (N mark) is displayed on the product.
- Touch the smartphone to the product for 1-2 seconds until PlayMemories Mobile launches.
- To transfer two or more images, select MENU → (Wireless) → [Send to Smartphone] to select images. After the connection enabled screen appears, use

NFC to connect the product and the smartphone.

About “NFC”

NFC is a technology that enables short-range wireless communication between various devices, such as mobile phones or IC tags, etc. NFC makes data communication simpler with just a touch on the designated touch-point.

- NFC (Near Field Communication) is an international standard of short-range wireless communication technology.

Note

- You can select an image size to be sent to the smartphone from[Original], [2M], or [VGA]. To change the image size, refer to the following steps.
  - For Android smartphone
    Start PlayMemories Mobile, and change the image size by [Settings] → [Copy Image Size].
  - For iPhone/iPad
    Select PlayMemories Mobile in the setting menu, and change the image size by [Copy Image Size].
- RAW images are converted to JPEG format when they are sent.
- If the Image Index is displayed on the product, you cannot transfer images using the NFC function.
- If you cannot make a connection, perform the following:
  - Launch PlayMemories Mobile on your smartphone, and then move the smartphone slowly toward the (N mark) of this product.
  - If the smartphone is in a case, remove it.
  - If the product is in a case, remove it.
  - Confirm that the NFC function is activated on the smartphone.
- When [Airplane Mode] is set to [On], you cannot connect the product and the smartphone. Set [Airplane Mode] to [Off].
- You cannot send AVCHD format movies.
- You cannot send XAVC S format movies.

---

[230] How to Use │ Using Wi-Fi functions │ Transferring images to a computer

Send to Computer

You can transfer images stored in the product to a computer connected to a wireless access point or wireless broadband router and easily make backup copies using this operation. Before starting this operation, install PlayMemories Home on your computer and register the access point on the product.

1. Start your computer.

2. MENU → (Wireless) → [Send to Computer].

Note

- Depending on the application settings of your computer, the product will turn off after saving the images to your computer.
- You can transfer images from the product to only one computer at a time.
- If you want to transfer images to another computer, connect the product and the computer via a USB connection and follow the instructions in PlayMemories Home.

View on TV

You can view images on a network-enabled TV by transferring them from the product without connecting the product and TV with a cable. For some TVs, you may need to perform operations on the TV. For details, refer to the operating instructions supplied with the TV.

1. MENU → (Wireless) → [View on TV] → desired device to be connected.
2. When you want to play back images using slideshow, press ● on the center of the control wheel.

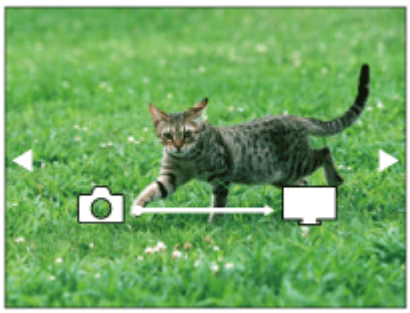

- To display the next/previous image manually, press the right/left side of the control wheel.
- To change the device to be connected, press the bottom side of the control wheel, then select [Device list].

Slideshow settings

You can change the slideshow settings by pressing the bottom side of the control wheel.

Playback Selection:

Selects the group of images to be shown.

Folder View(Still):

Selects from [All] and [All in Folder].

Date View:

Selects from [All] and [All in Date Rng.].

Interval:

Selects from [Short] and [Long].

Effects*:

Select from [On] and [Off].

Playback Image Size:

Select from [HD] and [4K].

*The settings are effective only for BRAVIA TV which is compatible with the functions.

Note

- You can use this function on a TV that supports DLNA renderer.
- You can view images on a Wi-Fi Direct-enabled TV or network-enabled TV (including cable TV).
- If you connect TV and this product and do not use Wi-Fi Direct, you need to register your access point first.
- Displaying the images on the TV may take time.
- Movies cannot be shown on a TV via Wi-Fi. Use an HDMI cable (sold separately).

---

[232] How to Use │ Using Wi-Fi functions │ Changing the settings of Wi-Fi functions

Airplane Mode

When you board an airplane, etc., you can turn off all Wi-Fi functions temporarily.

1. MENU → (Wireless) → [Airplane Mode] → desired setting.
   If you set [Airplane Mode] to [On], an airplane mark will be displayed on the screen.

---

[233] How to Use │ Using Wi-Fi functions │ Changing the settings of Wi-Fi functions

WPS Push

If your access point has the WPS button, you can register the access point to this product easily by pushing the WPS button.

1. MENU → (Wireless) → [WPS Push].

2. Press the WPS button on the access point you want to register.

Note

- [WPS Push] works only if the security setting of your access point is set to WPA or WPA2 and your access point supports the WPS button method. If the security setting is set to WEP or your access point does not support the WPS button method, perform [Access Point Set.].
- For details about the available functions and settings of your access point, see the access point operating instructions or contact the administrator of the access point.
- A connection may not be enabled depending on the surrounding conditions, such as the type of wall material or if there is an obstruction or poor wireless signal between the product and access point. If that happens, change the location of the product or move the product closer to the access point.

Access Point Set.

You can register your access point manually. Before starting the procedure, check the SSID name of the access point, security system, and password. The password may be preset in some devices. For details, see the access point operating instructions, or consult the access point administrator.

1. MENU → (Wireless) → [Access Point Set.].

2. Select the access point you want to register.

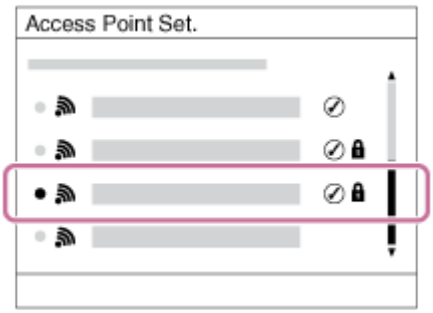

When the desired access point is displayed on the screen: Select the desired access point.
When the desired access point is not displayed on the screen: Select [Manual Setting] and set the access point.

*For the input method, refer to “How to use the keyboard.”

- If you select [Manual Setting], input the SSID name of the access point, then select the security system.

3. Input the password, and select [OK].

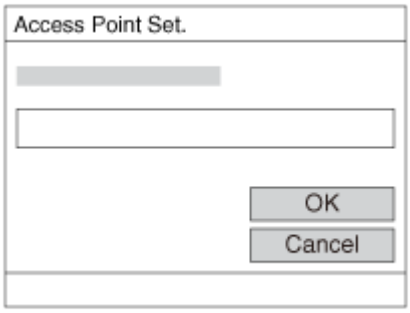

- Access points without the 🔒 mark do not require a password.

4. Select [OK].

How to use the keyboard

When manual character entry is required, a keyboard is displayed on the screen.

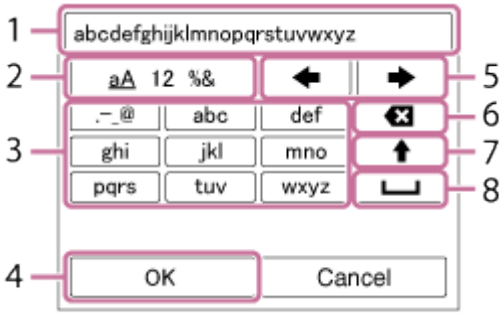

1. **Input box** The characters you entered are displayed.
2. **Switch character types** Each time you press ● on the center of the control wheel, the character type switches among alphabet letters, numerals and symbols.
3. **Keyboard** Each time you press ● on the center, the character that you enter will be displayed.

   ### For example: If you want to enter “abd”

   Select the key for “abc” and press ● once to display “a” → select “➡ ”((5) Move cursor) and press ● → select the key for “abc” and press ● twice to display “b” → select the key for “def” and press ● once to display “d”.
4. **Finalize** Finalizes the entered characters.
5. **Move cursor** Moves the cursor in the input box to the right or left.
6. **Delete** Deletes the character preceding the cursor.
7. ⬆ Switches the next character to a capital or small letter.
8. ␣ Enters a space.

- To cancel the input, select [Cancel].

Other setting items

Depending on the status or the setting method of your access point, you may want to set

more items.

WPS PIN:

Displays the PIN code you enter into the connected device.

Priority Connection:

Select [On] or [Off].

IP Address Setting:

Select [Auto] or [Manual].

IP Address:

If you are entering the IP address manually, enter the set address.

Subnet Mask/Default Gateway:

When you set [IP Address Setting] to [Manual], enter the IP address to match your network environment.

Note

- To give the registered access point priority, set [Priority Connection] to [On].

---

[235] How to Use | Using Wi-Fi functions | Changing the settings of Wi-Fi functions

Edit Device Name

You can change the device name under Wi-Fi Direct.

1. MENU → (Wireless) → [Edit Device Name].
2. Select the input box, then input the device name →[OK].
   - For input method, refer to "How to use the keyboard."

---

[236] How to Use | Using Wi-Fi functions | Changing the settings of Wi-Fi functions

Disp MAC Address

Displays the MAC address of this product.

1. MENU → (Wireless) → [Disp MAC Address].

---

[237] How to Use | Using Wi-Fi functions | Changing the settings of Wi-Fi functions

SSID/PW Reset

This product shares the connection information for [Send to Smartphone] and [Smart Remote Embedded] with a device that has permission to connect. If you want to change the device that is permitted to connect, reset the connection information.

1. MENU → (Wireless) → [SSID/PW Reset] → [OK].

Note

- If you connect this product to the smartphone after resetting the connection information, you must register the smartphone again.

[238] How to Use | Using Wi-Fi functions | Changing the settings of Wi-Fi functions

Reset Network Set.

Resets all the network settings to default settings.

1. MENU → (Wireless) → [Reset Network Set.] → [OK].

[239] How to Use | Adding applications to the product | PlayMemories Camera Apps

PlayMemories Camera Apps

You can add the desired functions to this product by connecting to the application download website (PlayMemories Camera Apps) via the Internet. For example, the following operations are available:

- You can use various effects for shooting images.
- You can upload images to network services directly from the product.
- Press MENU → (Application) → [Introduction] for information about the service and available countries and regions.

Recommended computer environment

For details on the recommended computer environments for downloading an application and adding functions to the product, use to the following URL:
“PlayMemories Camera Apps” website (www.sony.net/pmca/)

Opening a service account

You can open a service account, which is required to download applications.

1. Access the application download website.
   http://www.sony.net/pmca/
2. Follow the instructions on the screen and acquire a service account.
   - Follow the instructions on the screen to download the desired application to the product.

Downloading applications

You can download applications using your computer.

1. Access the application downloading website.
   http://www.sony.net/pmca/
2. Select the desired application and download the application to the product following the instructions on the screen.
   - Connect the computer and the product using the micro USB cable (supplied), following the instructions on the screen.

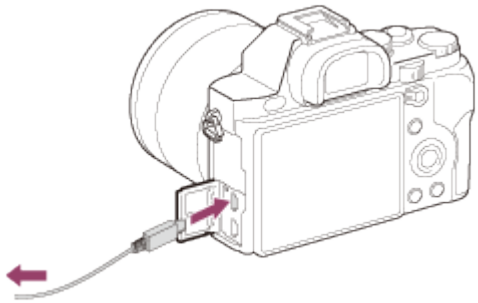

[243] How to Use | Adding applications to the product | Installing the applications

Downloading applications directly to the product using the Wi-Fi function

You can download applications using the Wi-Fi function without connecting to a computer.

1. MENU → (Application) → Application List → (PlayMemories Camera Apps), then follow the instructions on the screen to download applications.
   Acquire a service account in advance.

Note

- When the IP address setting of this product is [Manual], you cannot download an application. Set [IP Address Setting] to [Auto].

[244] How to Use | Adding applications to the product | Starting the applications

Launching the downloaded application

Launch an application that has been downloaded from the application download website PlayMemories Camera Apps.

1. MENU → (Application) → [Application List] → desired application to launch.

Hint

How to launch the applications faster

Assign [Download Appli.] and [Application List] to the custom key. You can launch the

applications or display application list only by pressing the custom key during the shooting information screen is displayed.

---

[245] How to Use │ Adding applications to the product │ Managing the applications

Uninstalling applications

You can uninstall applications from this product.

1. MENU → (Application) → Application List → [Application Management] → [Manage and Remove].
2. Select the application to be uninstalled.
3. Select to uninstall the application.

- The uninstalled application can be re-installed. For details, see the application download website.

---

[246] How to Use │ Adding applications to the product │ Managing the applications

Changing the order of applications

You can change the order in which added applications are displayed on this product.

1. MENU → (Application) → Application List → [Application Management] → [Sort].
2. Select the application of which you want to change the order.
3. Select the destination.

---

[247] How to Use │ Adding applications to the product │ Managing the applications

Confirming the account information of PlayMemories Camera Apps

---

The account information for the “Sony Entertainment Network” that is registered on the product is displayed.

1. MENU → (Application) → Application List → [Application Management] → [Display Account Information].

---

[248] How to Use │ Viewing on computers │ Recommended computer environment

Recommended computer environment

You can confirm the operating computer environment of the software from the following URL: www.sony.net/pcenv/

---

[249] How to Use │ Viewing on computers │ Using the software

PlayMemories Home

With PlayMemories Home, you can do the following:

- You can import images shot with this product to your computer.
- You can play back the images imported to your computer.
- You can share your images using PlayMemories Online.

Also for Windows, you can do the following:

- You can organize images on the computer on a calendar by shooting date to view them.
- You can edit and correct images, such as by trimming and resizing.
- You can create a Blu-ray Disc, AVCHD disc or DVD-Video disc from AVCHD movies imported to a computer.
  You cannot create discs from XAVC S format movies, although they can be imported to computers.
- You can upload images to a network service. (An internet connection is required.)
- For other details, please refer to the Help of PlayMemories Home.
- An Internet connection is required to use PlayMemories Online or other network services. PlayMemories Online or other network services may not be available in some countries or regions.

Installing PlayMemories Home

1. Using the Internet browser on your computer, go to the following URL and install PlayMemories Home.
   www.sony.net/pm/
   - Proceed the installation by following the instructions on the screen.
   - When installation is completed, PlayMemories Home starts up.
   - If PMB (Picture Motion Browser) supplied with a product that was purchased before 2011 has already been installed on the computer, PMB will be overwritten by PlayMemories Home. Please use PlayMemories Home.

2. Connect the product and your computer using the supplied micro USB cable.
   - New functions may be added to PlayMemories Home. Even if PlayMemories Home has already been installed on your computer, connect this product and your computer again.

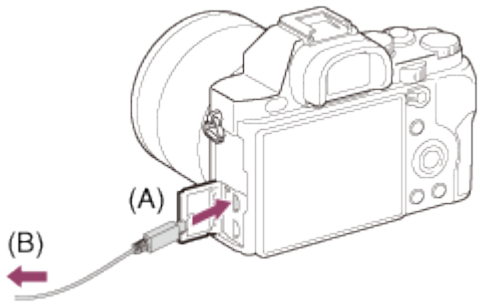

A: To the Multi/Micro USB Terminal
B: To the USB jack of the computer

Note

- Log on as Administrator.
- It may be necessary to restart your computer. When the restart confirmation message appears, restart the computer following the instructions on the screen.
- DirectX may be installed depending on your computer's system environment.

Hint

- For details on PlayMemories Home, refer to the Help of PlayMemories Home or the PlayMemories Home support page (http://www.sony.co.jp/pmh-se/) (English only).

Software for Mac computers

For details on software for Mac computers, access the following URL:
http://www.sony.co.jp/imsoft/Mac/

Wireless Auto Import

“Wireless Auto Import” is required if you are using a Mac computer and want to import images to the computer using Wi-Fi function. Download “Wireless Auto Import” from the URL above, and install it on your Mac computer. For details, see Help for “Wireless Auto Import.”

Note

- The software that can be used varies depending on the region.

“Image Data Converter”

With “Image Data Converter,” you can do the following:

- You can edit images recorded in RAW format with various corrections, such as tone curve and sharpness.
- You can adjust images with white balance, exposure, and[Creative Style], etc.
- You can save the still images displayed and edited on a computer.
  You can either save the still image as RAW format or save it in the general file format.
- You can display and compare the RAW images and JPEG images recorded by this product.
- You can rank images in five grades.
- You can apply color labels.

Installing “Image Data Converter”

1. Download and install the software by accessing the following URL (English only).
   http://www.sony.co.jp/ids-se/

Note

- Log on as Administrator.

---

[254] How to Use | Viewing on computers | Using the software

Accessing “Image Data Converter Guide”

Windows:
[Start] → [All Programs] → [Image Data Converter] → [Help] → [Image Data Converter Ver.4].

- For Windows 8, start [Image Data Converter Ver.4], and select [Help] from the menu bar → [Image Data Converter Guide].

Mac:
Finder → [Applications] → [Image Data Converter] → [Image Data Converter Ver.4], and select [Help] from the menu bar →[Image Data Converter Guide].

- For details on operation, you can also refer to the “Image Data Converter” support page (English only).
  http://www.sony.co.jp/ids-se/

---

[255] How to Use | Viewing on computers | Using the software

“Remote Camera Control”

When using “Remote Camera Control,” the following operations are available on your computer.

- Changing this product’s settings and shooting.
- Recording images directly to the computer.
- Performing interval timer shooting.

Use these functions after selecting MENU → (Setup) → [USB Connection] → [PC Remote]. For details on how to use “Remote Camera Control,” refer to the Help.

---

[256] How to Use | Viewing on computers | Using the software

Installing “Remote Camera Control”

Download and install the software by accessing the following URL:

Windows:

http://www.sony.co.jp/imsoft/Win/

Mac:

http://www.sony.co.jp/imsoft/Mac/

---

[257] How to Use │ Viewing on computers │ Using the software

Accessing the Help of Remote Camera Control

Windows:

[Start] → [All Programs] → [Remote Camera Control] → [Remote Camera Control Help].

- For Windows 8, start [Remote Camera Control], and right-click the title bar to select [Remote Camera Control Help].

Mac:

Finder → [Applications] → [Remote Camera Control], and select [Help] from the menu bar → [Remote Camera Control Help].

---

[258] How to Use │ Viewing on computers │ Connecting this product and a computer

Connecting the product to a computer

---

1. Insert a sufficiently charged battery pack into the product, or connect it to a wall outlet (wall socket) using an AC Adaptor AC-PW20 (sold separately).
2. Turn on the product and the computer.
3. Connect the product and your computer using the micro USB cable (supplied) **(A)** .

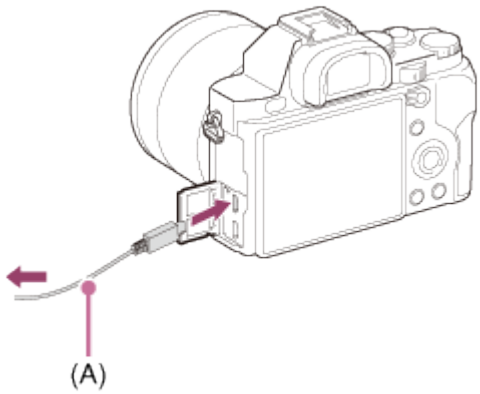

[259] How to Use │ Viewing on computers │ Connecting this product and a computer

Importing images to the computer

PlayMemories Home allows you to easily import images. For details on PlayMemories Home functions, see the Help of PlayMemories Home.

Importing images to the computer without using PlayMemories Home (For Windows)

When the AutoPlay Wizard appears after making a USB connection between this product and a computer, click [Open folder to view files] → [OK] → [DCIM] or [MP_ROOT]. Then copy the desired images to the computer.

- If Device Stage appears on a Windows 7 or Windows 8 computer, double-click[Browse Files] → media icon → folder in which the images you want to import are stored.

Importing images to the computer without using PlayMemories Home (For Mac)

Connect the product to your Mac computer. Double-click the newly recognized icon on the desktop → the folder in which the image you want to import is stored. Then drag and drop the image file on to the hard disk icon.

Note

- For operations such as importing AVCHD movies to the computer, use PlayMemories Home.
- Do not edit or otherwise process AVCHD movie files/folders from the connected computer. Movie files may be damaged or become unplayable. Do not delete or copy AVCHD movies on the memory card from the computer. Sony is not held liable for consequences resulting from such operations via the computer.

[260] How to Use │ Viewing on computers │ Connecting this product and a computer

Disconnecting the product from the computer

Disconnects the USB connection between this product and the computer.
Perform the procedures from step 1 to 2 below before performing the following operations:

- Disconnecting the cable.
- Removing a memory card.
- Turning off the product.

1. Click (Safely remove USB Mass Storage Device) on the taskbar.
2. Click the displayed message.

Note

- For Mac computers, drag and drop the icon of the memory card or the drive icon in the “Trash” icon. The product is disconnected from the computer.
- For Windows 7/Windows 8 computers, the disconnect icon may not appear. In that case, you can skip steps 1 and 2 above.

Disc type

High-definition image quality (HD)

A Blu-ray Disc enables you to record longer duration of high definition image quality (HD) movies than DVD discs.

High-definition image quality (HD) (AVCHD recording disc)

High definition image quality (HD) movie can be recorded on DVD media, such as DVD-R discs, and a high definition image quality (HD) disc is created.

- You can play a high definition image quality (HD) disc on AVCHD format playback devices, such as a Sony Blu-ray Disc player and a PlayStation®3. You cannot play the disc on ordinary DVD players.

Standard definition image quality (STD)

Standard definition image quality (STD) movie converted from high definition image quality (HD) movie can be recorded on DVD media, such as DVD-R discs, and a standard image quality (STD) disc is created.

Hint

You can use the following types of 12 cm discs with PlayMemories Home. For Blu-ray discs, see “Creating Blu-ray Discs”.

DVD-R/DVD+R/DVD+R DL: Non-rewritable
DVD-RW/DVD+RW: Rewritable

- Always maintain your “PlayStation 3” to use the latest version of the “PlayStation 3” system software.
- “PlayStation 3” may not be available in some countries/regions.

---

[262] How to Use │ Viewing on computers │ Creating a movie disc

Selecting the disc creation method

You can create a disc from an AVCHD format movie recorded using this product. Depending on the disc type, playable devices may vary. Select a method suitable for your disc player. For details on creating a disc using PlayMemories Home, see the Help of PlayMemories Home. (Only for Windows)

Creates a disc with high-definition image quality (HD)
Writable movie format: PS, FX, FH
Player: Blu-ray Disc playback devices (Sony Blu-ray Disc player, PlayStation®3, etc.)

Creates a disc with high-definition image quality (HD) (AVCHD recording disc)
Writable movie format: PS*, FX*, FH
Player: AVCHD format playback devices (Sony Blu-ray Disc player, PlayStation®3, etc.)

Creates a disc with standard definition image quality (STD)
Writable movie format: PS*, FX*, FH*
Player: Ordinary DVD playback devices (DVD player, computer that can play back DVD discs, etc.)

*You can create a disc with movies recorded in these formats using PlayMemories Home by down-converting the image quality.

---

[263] How to Use │ Viewing on computers │ Creating a movie disc

Creating a disc with a device other than a computer

You can also create discs using a Blu-ray recorder, etc. Depending on which device you use, the types of disc that can be created vary.

Blu-ray recorder:

High-definition image quality (HD)

Standard definition image quality (STD)

HDD recorder, etc:

Standard definition image quality (STD)

Note

- When creating AVCHD discs using PlayMemories Home from movies recorded with the[Record Setting] of [60p 28M(PS)]/[50p 28M(PS)], [60i 24M(FX)]/[50i 24M(FX)] or [24p 24M(FX)]/[25p 24M(FX)], the image quality is converted and it is not possible to create discs that have the original image quality. Converting the image quality takes time. To record movies with the original image quality, use Blu-ray Discs.
- To create a Blu-ray Disc from movies recorded in [60p 28M(PS)]/[50p 28M(PS)], you need to use a device that is compliant with AVCHD format Ver. 2.0. The created Blu-ray Disc can be played back only on a device that is compliant with AVCHD format Ver. 2.0.
- For details on how to create a disc, refer to the operating instructions of the device you use.
- Movies recorded with [File Format] set to [XAVC S] cannot be copied to discs.

Creating Blu-ray Discs

You can create Blu-ray Discs from AVCHD movies imported to a computer. The computer must be capable of creating Blu-ray Discs. BD-R (not re-writable) or BD-RE (rewritable) discs can be used. Multi-session recordings cannot be made. To create Blu-ray Discs using PlayMemories Home, be sure to install the dedicated add-on software. For details, see the following URL:

http://support.d-imaging.sony.co.jp/BDUW/
To install, your computer must be connected to the Internet. For detailed operations, see the Help of PlayMemories Home.

Note

- To play back a Blu-ray Disc that was created using movies recorded in[60p 28M(PS)]/[50p 28M(PS)], you must use a device that is compliant with AVCHD format Ver. 2.0.

Precautions

Backing up memory cards

Data may be corrupted in the following cases. Be sure to back up the data for protection.

- When the memory card is removed or the product is turned off during a read or write operation.
- When the memory card is used in locations subject to static electricity or electrical noise.

Creating an image database file

If you insert a memory card that does not contain an image database file into the product and turn on the power, the product automatically creates an image database file using some of the memory card's capacity. The process may take a long time and you cannot operate the product until the process is completed.
If a database file error occurs, export all images to your computer using PlayMemories Home, and then format the memory card using this product.

Do not use/store the product in the following places

- In an extremely hot, cold or humid place
  In places such as in a car parked in the sun, the camera body may become deformed and this may cause a malfunction.
- Storing under direct sunlight or near a heater
  The camera body may become discolored or deformed, and this may cause a malfunction.
- In a location subject to rocking vibration
- Near strong magnetic place
- In sandy or dusty places
  Be careful not to let sand or dust get into the product. This may cause the product to malfunction, and in some cases this malfunction cannot be repaired.

On operating temperatures

Your product is designed for use under the temperatures between 0°C and 40 °C (32 °F and 104 °F). Shooting in extremely cold or hot places that exceed this range is not recommended.

On moisture condensation

- If the product is brought directly from a cold to a warm location, moisture may condense inside or outside the product. This moisture condensation may cause a malfunction of the product.
- If moisture condensation occurs, turn off the product and wait about an hour for the moisture to evaporate. Note that if you attempt to shoot with moisture remaining inside the lens, you will be unable to record clear images.

On the functions available with the product

This manual describes the functions of 1080 60i-compatible devices and 1080 50i-compatible devices. To check whether this product is a 1080 60i-compatible device or 1080 50i-compatible device, look for the following marks on the bottom of the product.

- 1080 60i-compatible device: 60i
- 1080 50i-compatible device: 50i

Notes for when on board an airplane

- In an airplane, set [Airplane Mode] to [On].

On image data compatibility

This product conforms with DCF (Design rule for Camera File system) universal standard established by JEITA (Japan Electronics and Information Technology Industries Association).

- Playback of images recorded with your product on other equipment and playback of images recorded or edited with other equipment on your product are not guaranteed.

Notes on playing movies on other devices

- This product uses MPEG-4 AVC/H.264 High Profile for AVCHD format recording. For this reason, movies recorded in AVCHD format with this product cannot be played by the following devices.
  - Other devices compatible with AVCHD format that does not support High Profile
  - Devices incompatible with the AVCHD format

  This product also uses MPEG-4 AVC/H.264 Main Profile for MP4 format recording. For this reason, play back movies recorded in MP4 format with this product on MPEG-4 AVC/H.264 supported devices.
- Discs recorded with HD (high definition) image quality can be played back only on AVCHD format-compatible devices.

DVD-based players or recorders cannot play back HD image quality discs, as they are incompatible with the AVCHD format. Also, DVD-based players or recorders may fail to eject HD image quality discs that are recorded using the AVCHD format.

On the monitor and lens

- The monitor is manufactured using extremely high-precision technology so over 99.99 % of the pixels are operational for effective use. However, there may be some tiny black points and/or bright points (white, red, blue or green in color) that constantly appear on the monitor. These points are normal in the manufacturing process and do not affect the images in any way.
- Exposing the monitor or lens to direct sunlight for long periods may cause a malfunction. Exercise caution when placing the product near a window or outdoors.
- Do not press against the monitor. The monitor may be discolored and that may cause a malfunction.
- Images may trail across on the monitor in a cold location. This is not a malfunction.
- If the monitor has drops of water or other liquids on it, wipe it with a soft cloth. If the monitor stays wet, the surface of the monitor may change or deteriorate. This may cause a malfunction.
- In addition, the monitor may be darker than usual at first.
- Make sure not to bump the lens or subject it to force.

Notes on discarding or transferring this product to others

When discarding or transferring this product to others, make sure to perform the following operation to protect private information.

- Perform [Setting Reset] to reset all the settings.

---

[266] How to Use │ Precautions/This product │ Precautions

On the internal rechargeable battery

This camera has an internal rechargeable battery for maintaining the date and time and other settings regardless of whether the power is on or off, or whether the battery pack is charged or discharged. This rechargeable battery is continually charged as long as you are using the product. However, if you use the product for only short periods, it gradually discharges. If you do not use the product at all for about 2 month(s) it becomes completely discharged. In this case, be sure to charge this rechargeable battery before using the product. However, even if this rechargeable battery is not charged, you can still use the product as long as you do not record the date and time.

Charging method of the internal rechargeable battery

Insert a charged battery pack into the product, or connect the product to a wall outlet (wall socket) using the AC Adaptor (supplied), and leave the product for 24 hours or more with the power off.

---

[267] How to Use │ Precautions/This product │ Precautions

Notes on the battery pack

Charging the battery pack

- Charge the battery pack (supplied) before using the product for the first time.
- The charged battery pack will discharge little by little even if you do not use it. Charge the battery pack each time before you use the product so that you do not miss any opportunities to shoot images.
- You can charge the battery pack even if it is not completely discharged. You can use a partially charged battery pack.
- If the Charge lamp flashes and charging is canceled halfway, remove the battery pack once then reinsert it.
- We recommend charging the battery pack in an ambient temperature of between 10 °C and 30 °C (50 °F and 86 °F). The battery pack may not be effectively charged in temperatures outside this range.
- When you connect this product and a laptop computer that is not connected to a power source, the laptop’s battery charge may decrease. Do not charge this product using the laptop computer for too long.
- Do not turn on/restart a computer, wake a computer from sleep mode, or turn off a computer while this product is connected to the computer via USB cable. Doing so may cause a malfunction of this product. Disconnect the product and the computer before performing the above operations.
- We do not guarantee charging if you are using a self-built or modified computer.

Charging time (Full charge)

The charging time is approximately 150 minutes using the AC adaptor (supplied). The above charging time applies when charging a fully depleted battery pack at a temperature of 25°C (77°F). Charging may take longer depending on conditions of use and circumstances.

Effective use of the battery pack

- Battery performance decreases in low temperature environments. So in cold places, the operational time of the battery pack is shorter. To ensure longer battery pack use, we recommend putting the battery pack in your pocket close to your body to warm it up, and

insert it in the product immediately before you start shooting. If there are any metal objects such as keys in your pocket, be careful of causing a short-circuit.
- The battery pack will run down quickly if you use the flash or zoom frequently.
- We recommend preparing spare battery packs and taking trial shots before taking the actual shots.
- Do not expose the battery pack to water. The battery pack is not water-resistant.
- Do not leave the battery pack in extremely hot places, such as in a car or under direct sunlight.
- If the battery terminal is dirty, you may not be able to turn on the product or the battery pack may not be properly charged. In that case, clean the battery by lightly wiping off any dust using a soft cloth or a cotton swab.

Remaining battery indicator

- The remaining battery indicator appears on the screen.

A: Battery level high
B: Battery exhausted
- It takes about one minute for the correct remaining battery indicator to appear.
- The correct remaining battery indicator may not be displayed under some operating or environmental conditions.
- If the remaining battery time does not appear on the screen, press the DISP (Display Setting) button to display it.

How to store the battery pack

- To maintain the battery pack's function, charge the battery pack and then fully discharge it in the product at least once a year before storing it. Store the battery pack in a cool, dry place.
- To use the battery pack up, leave the product in slide show playback mode until the power goes off.
- To prevent staining the terminal, short-circuiting, etc., be sure to use a plastic bag to keep away from metal materials when carrying or storing the battery pack.

On battery life

- The battery life is limited. If you use the same battery repeatedly, or use the same battery for a long period, the battery capacity decreases gradually. If the available time of the battery is shortened significantly, it is probably time to replace the battery pack with a new one.
- The battery life varies according to how the battery pack is stored and the operating

conditions and environment in which each battery pack is used.

[268] How to Use | Precautions/This product | Precautions

Battery pack and battery charger

Charging the battery pack

- The charging time differs depending on the remaining battery charge and the charging conditions.
- We recommend charging the battery pack at an ambient temperature of between 10°C to 30°C (50°F to 86°F). The battery pack may not charge efficiently outside this temperature range.
- Connect the battery charger to the nearest wall outlet (wall socket).
- Do not recharge a battery pack that has just been charged or is nearly fully-charged before using it. Doing so affects the battery performance.
- If the CHARGE lamp flashes, the battery may be malfunctioning, or a battery pack of another type than the specified one may have been inserted. Make sure the battery pack is correct. If the battery pack is of the specified type, remove the battery pack and insert a different battery pack, and check whether the battery charger operates correctly. If the battery charger operates correctly, the first battery pack may be malfunctioning.
- If the battery pack is dirty, the battery pack may not charge correctly. Wipe off the dirt with a dry cloth.

Notes on using the battery pack

- The remaining battery indicator may not provide an accurate reading depending on the battery usage or environment.
- The battery pack is not waterproof. Be careful not to get the battery pack wet.
- Do not leave the battery pack in locations with high temperatures, such as in a car or under a blazing sun.

Using the battery pack efficiently

- When the ambient temperature is low, the battery performance is degraded and the operating length of the battery decreases. In addition, the speed of continuous shooting decreases. We recommend that you warm the battery pack, for example in your pocket, and insert it into the camera right before you start shooting.
- If you use the flash often, shoot images continuously, turn the camera on and off frequently, or use a brighter setting for the screen, the battery life will decrease.

Battery life

- The battery life is limited. If you use the same battery pack repeatedly, or use the same battery pack for a long period, the battery capacity decreases gradually. If the available time of the battery pack shortens significantly, it is probably time to replace the battery pack with a new one.
- The battery life varies between different battery packs, and according to how the battery pack is stored and the operating conditions and environment in which it is used.

Storing the battery pack

- To maintain the battery pack’s function, charge the battery pack and then fully discharge it in the camera at least once a year before storing it. Then remove the battery pack and store in a cool, dry place.

---

[269] How to Use │ Precautions/This product │ Precautions

Charging the battery pack

- The supplied AC Adaptor is dedicated to this product. Do not connect with other electronic devices. Doing so may cause a malfunction.
- Make sure to use a genuine Sony AC Adaptor.
- If the product's Charge lamp flashes while charging, remove the battery pack being charged, and then insert the same battery pack firmly back into the product. If the Charge lamp flashes again, this may indicate a faulty battery or that a battery pack other than the specified type has been inserted. Check that the battery pack is the specified type.
  If the battery pack is the specified type, remove the battery pack, replace it with a new or different one and check that the newly inserted battery is charging correctly. If the newly inserted battery is charging correctly, the previously inserted battery may be faulty.
- If the Charge lamp flashes even if the AC Adaptor is connected to the product and the wall outlet (wall socket), this indicates that charging has stopped temporarily and is on standby. Charging stops and enters standby status automatically when the temperature is outside of the recommended operating temperature. When the temperature returns to the appropriate range, charging resumes and the Charge lamp lights up again. We recommend charging the battery pack in an ambient temperature of between 10°C to 30°C (50°F to 86°F).
- When the AC Adaptor (supplied) is connected to the product, shooting/playback is not available.

---

[270] How to Use │ Precautions/This product │ Precautions

Memory card

Memory card

Card Type Indications in Help Guide

Memory Stick PRO Duo media

(Memory Stick XC-HG Duo media/Memory Stick PRO Duo media/Memory Stick PRO-HG Duo media)

SD card

(SD memory card/SDHC memory card/SDXC memory card)

- Memory Stick PRO Duo media and SD cards up to 64 GB have been tested and proven to operate with this product.
- When recording movies, the following memory cards are recommended:
  - MEMORY STICK PRO DUO (Mark2) (Memory Stick PRO Duo media (Mark2))
  - MEMORY STICK XC-HG DUO (Memory Stick XC-HG Duo media (Mark2))
  - MEMORY STICK PRO-HG DUO (Memory Stick PRO-HG Duo media)
  - Class 4 SD card or faster
- When recording XAVC S format movies, use the following memory cards:
  - SDXC memory card with a capacity of at least 64 GB (Class 10 or faster)
  - UHS-I compatible SDXC memory card with a capacity of at least 64 GB
  - Memory Stick XC-HG Duo media
- This product supports UHS-I-compatible SD cards.

Note

- When you use a memory card with this product for the first time, it is recommended that you format the card using the product for stable performance of the memory card before shooting.
  Note that formatting permanently erases all data on the memory card, and is unrecoverable. Save precious data on a computer, etc.
- If you repeatedly shoot and delete images for a long time, fragmentation of data in a file in the memory card may occur, and movie recording may be interrupted in the middle of shooting. If this happens, save your images to a computer or other storage location, then execute [Format].
- Memory card formatted with a computer is not guaranteed to operate with the product.
- Data read/write speeds differ depending on the combination of the memory card and the equipment used.
- We recommend backing up important data, such as to a hard disk of a computer.
- Do not attach a label on the memory card itself nor on a memory card adaptor.
- Do not touch the terminal section of the memory card with your hand or a metal object.
- Do not strike, bend or drop the memory card.
- Do not disassemble or modify the memory card.

Do not expose the memory card to water.

- Do not leave the memory card within the reach of small children. They might accidentally swallow it.
- The memory card may be hot just after it has been used for a long time. Be careful when you handle it.
- Do not insert a memory card that does not fit the memory card slot. Doing so will cause a malfunction.
- Do not use or store the memory card under the following conditions:
  - High temperature locations such as in a car parked under the sun
  - Locations exposed to direct sunlight
  - Humid locations or locations with corrosive substances present
- Images recorded on a Memory Stick XC-HG Duo media and SDXC memory card cannot be imported to or played on computers or AV devices that are not compatible with exFAT when connected using a micro USB cable. Make sure that the device is compatible with exFAT before connecting it to the product. If you connect your product to an incompatible device, you may be prompted to format the card. Never format the card in response to this prompt, as doing so will erase all data on the card. (exFAT is the file system used on Memory Stick XC-HG Duo media and SDXC memory cards.)

Memory Stick media

The types of Memory Stick media that can be used with the product are as follows. However, proper operation cannot be guaranteed for all Memory Stick media functions.

- **Memory Stick PRO Duo media:** *1*2*3
- **Memory Stick PRO-HG Duo media:** *1*2
- **Memory Stick XC-HG Duo media:** *1*2

*1This Memory Stick is equipped with MagicGate function. MagicGate is copyright protection technology that uses encryption technology. Data recording/playback that requires MagicGate functions cannot be performed with this product.

*2High-speed data transfer using a parallel interface is supported.

*3When recording movies, only media marked with Mark2 can be used.

Notes on using Memory Stick Micro media (sold separately)

- This product is compatible with Memory Stick Micro media (M2). M2 is an abbreviation for Memory Stick Micro media.
- To use a Memory Stick Micro media with this product, be sure to insert the Memory Stick Micro media into an M2 Adaptor as large as Duo size. If you insert a Memory Stick Micro media into the product without an M2 Adaptor as large as Duo size, you might not be able to remove it from the product.
- Do not leave the Memory Stick Micro media within the reach of small children. They might accidentally swallow it.

On cleaning

Cleaning the lens

- Do not use a cleaning solution containing organic solvents, such as thinner, or benzine.
- When cleaning the lens surface, remove dust with a commercially available blower. In case of dust that sticks to the surface, wipe it off with a soft cloth or tissue paper slightly moistened with lens cleaning solution. Wipe in a spiral pattern from the center to the outside. Do not spray lens cleaning solution directly onto the lens surface.

Cleaning the camera body

Do not touch the parts of the product inside the lens mount, such as a lens signal contact. To clean inside the lens mount, use a commercially available blower* to blow any dust off.

*Do not use a spray-type blower as doing so may cause a malfunction.

Cleaning the product surface

Clean the product surface with a soft cloth slightly moistened with water, then wipe the surface with a dry cloth. To prevent damage to the finish or casing:

- Do not expose the product to chemical products such as thinner, benzine, alcohol, disposable cloths, insect repellent, sunscreen or insecticide.
- Do not touch the product with any of the above on your hand.
- Do not leave the product in contact with rubber or vinyl for a long time.

Cleaning the monitor

- If oil from your hand or hand cream, etc., remain on the monitor, the original coating may become easily removable. Wipe oil or hand cream off as soon as possible.
- If you wipe the monitor firmly using tissue paper, etc., the coating may be scratched.
- If the monitor becomes dirty with fingerprints or dust, gently remove the dust from the surface, and then clean the monitor using soft cloth, etc.

Number of still images

The number of still images may vary depending on the shooting conditions and the memory card.

[Image Size]: [L: 12M]
When [Aspect Ratio] is set to [3:2]*

Standard

2GB: 445 images
4GB: 890 images
8GB: 1800 images
16GB: 3600 images
32GB: 7200 images
64GB: 14000 images

Fine

2GB: 325 images
4GB: 650 images
8GB: 1300 images
16GB: 2650 images
32GB: 5300 images
64GB: 10500 images

Extra fine

2GB: 180 images
4GB: 370 images
8GB: 750 images
16GB: 1500 images
32GB: 3000 images
64GB: 6000 images

RAW & JPEG

2GB: 99 images
4GB: 195 images
8GB: 395 images
16GB: 800 images
32GB: 1600 images
64GB: 3200 images

RAW

2GB: 140 images
4GB: 280 images
8GB: 570 images
16GB: 1100 images
32GB: 2300 images
64GB: 4600 images

*When the [Aspect Ratio] is set to other than [3:2], you can record more pictures than shown above. (Except when [Quality] is set to [RAW].)

Note

- Even if the number of remaining shootable images is greater than 9,999, the “9999”

indicator appears.
- When an image shot with other products is played back on this product, the image may not appear in the actual image size.

Recordable time of movies

The table below shows the approximate maximum recording times which can be recorded on the memory card that is formatted with this product. These numbers are the total times of all movie files on the memory card. The recordable time may vary depending on the shooting conditions and the memory card.
The values when [File Format] is set to [XAVC S] and [AVCHD] are based on shooting with [Dual Video REC] set to [Off].
(h (hour), m (minute))

[File Format]:[XAVC S]

60p 50M
50p 50M
2GB: -
4GB: -
8GB: -
16GB: -
32GB: -
64GB: 2 h 35 m
30p 50M
25p 50M
2GB: -
4GB: -
8GB: -
16GB: -
32GB: -
64GB: 2 h 35 m
24p 50M **(Only for 1080 60i compatible models.)**
2GB: -
4GB: -
8GB: -
16GB: -
32GB: -
64GB: 2 h 35 m

120p 50M
100p 50M
2GB: -
4GB: -
8GB: -
16GB: -
32GB: -
64GB: 2 h 35 m

[File Format]:[AVCHD]

60i 24M(FX)
50i 24M(FX)
2GB: 10 m
4GB: 20 m
8GB: 40 m
16GB: 1 h 30 m
32GB: 3 h
64GB: 6 h
60i 17M(FH)
50i 17M(FH)
2GB: 10 m
4GB: 30 m
8GB: 1 h
16GB: 2 h
32GB: 4 h 5 m
64GB: 8 h 15 m
60p 28M(PS)
50p 28M(PS)
2GB: 9 m
4GB: 15 m
8GB: 35 m
16GB: 1 h 15 m
32GB: 2 h 30 m
64GB: 5 h 5 m
24p 24M(FX)
25p 24M(FX)
2GB: 10 m
4GB: 20 m
8GB: 40 m
16GB: 1 h 30 m
32GB: 3 h
64GB: 6 h
24p 17M(FH)
25p 17M(FH)

2GB: 10 m
4GB: 30 m
8GB: 1 h
16GB: 2 h
32GB: 4 h
64GB: 8 h

[File Format]:[MP4]

1440×1080 12M
2GB: 20 m
4GB: 40 m
8GB: 1 h 20 m
16GB: 2 h 45 m
32GB: 5 h 30 m
64GB: 11 h
VGA 3M
2GB: 1 h 10 m
4GB: 2 h 25 m
8GB: 4 h 55 m
16GB: 10 h
32GB: 20 h
64GB: 40 h
Continuous shooting is possible for approximately 29 minutes for each shooting (limited by product specifications). For [MP4 12M] size movies, continuous shooting is possible for approximately 20 minutes (limited by 2 GB file size).

Note

- The recordable time of movies varies because the product is equipped with VBR (Variable Bit Rate), which automatically adjusts image quality depending on the shooting scene. When you record a fast-moving subject, the image is clearer but the recordable time is shorter because more memory is required for recording.
  The recordable time also varies depending on the shooting conditions, the subject or the image quality/size settings.

Plug adaptor

You can use the battery charger (supplied) and the AC Adaptor (supplied) in any country or region where the power supply is within 100 V to 240 V AC and 50 Hz/60 Hz.

Note

- Do not use an electronic voltage transformer as doing so may cause a malfunction.

[275] How to Use │ Precautions/This product │ Using this product abroad

On TV color systems

To view movies shot using this product on a television, the product and television must use the same color television system. Check the TV color system for the country or region where you are using the product.

- **NTSC system:**
  Bahama Islands, Bolivia, Canada, Central America, Chile, Colombia, Ecuador, Jamaica, Japan, Korea, Mexico, Peru, Surinam, Taiwan, the Philippines, the U.S.A., Venezuela, etc.
- **PAL system:**
  Australia, Austria, Belgium, China, Croatia, Czech Republic, Denmark, Finland, Germany, Holland, Hong Kong, Hungary, Indonesia, Italy, Kuwait, Malaysia, New Zealand, Norway, Poland, Portugal, Rumania, Singapore, Slovak Republic, Spain, Sweden, Switzerland, Thailand, Turkey, United Kingdom, Viet Nam, etc.
- **PAL-M system:**
  Brazil
- **PAL-N system:**
  Argentina, Paraguay, Uruguay
- **SECAM system:**
  Bulgaria, France, Greece, Guiana, Iran, Iraq, Monaco, Russia, Ukraine, etc.

[276] How to Use │ Precautions/This product │ Other information

Mount Adaptor

Using a Mount Adaptor (sold separately), you can attach an A-mount lens (sold separately) to this product.
For details, refer to the operating instructions supplied with the Mount Adaptor.

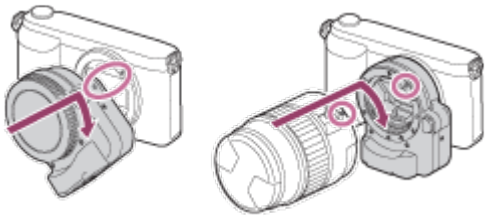

Note

- You may not be able to use the Mount Adaptor with certain lenses. Consult your Sony dealer or local authorized Sony service facility on compatible lenses.
- You cannot use the AF illuminator when using an A-mount lens.
- The sound of the lens and the product in operation may be recorded during movie recording.
  You can turn the sound off by selecting MENU → [Camera Settings] → [Audio Recording] → [Off].
- It may take a long time or may be difficult for the product to focus, depending on the lens used or the subject.

---

[277] How to Use | Precautions/This product | Other information

LA-EA1 Mount Adaptor

If you use the LA-EA1 Mount Adaptor (sold separately), the following functions are available.

Full size shooting:
Not available
Autofocus:
Available with SAM/SSM lens only*
AF system:
Contrast AF
AF/MF Select:
Can be changed using the operating switch on the lens.
Focus Mode:
Single-shot AF

*When an A-mount lens is attached, the autofocus speed will be slower than when an E-mount lens is attached. (Approximately two to seven seconds slower (for shooting based on the Sony measurement conditions). This may vary depending on conditions such as subject and brightness during shooting.)

- When using a Mount Adaptor, the Auto Focus does not work in movie mode.
- When using a Mount Adaptor in movie mode, adjust the aperture manually.

Available focus area
When the LA-EA1 Mount Adaptor is mounted, the available focus areas are the same as for the available settings of this camera.

---

[278] How to Use | Precautions/This product | Other information

LA-EA2 Mount Adaptor

If you use the LA-EA2 Mount Adaptor (sold separately), the following functions are available.

Full size shooting:
Not available.
Autofocus:
Available
AF system:
Phase Detection AF, which is controlled by the dedicated AF sensor inside the Mount Adaptor
AF/MF Select:
Lenses that do not support Direct manual focus: Can be changed using the operating switch on the lens.
Lenses that support Direct manual focus: Can be changed using the operating switch on the lens. When the switch on the lens is set to AF, you can use MENU to change the focusing method.

Other lenses:
Can be changed using MENU.
Focus Mode:
Available modes are as follows (Single-shot AF/Continuous AF)

Available focus area
Wide:
The product automatically selects a focus area from among 15 areas.
Center:
The product uses the focus area located in the center area exclusively.
Flexible Spot:
You can select a focus area from 15 areas using the control wheel.

LA-EA3 Mount Adaptor

If you use the LA-EA3 Mount Adaptor (sold separately), the following functions are available.

Full size shooting:
Available with full size shooting-compatible lenses only
Autofocus:
Available with SAM/SSM lens only*

AF system:
Contrast AF
AF/MF Select:
Can be changed using the operating switch on the lens.
Focus Mode:
Single-shot AF

*When an A-mount lens is attached, the autofocus speed will be slower than when an E-mount lens is attached. (Approximately two to seven seconds slower (for shooting based on the Sony measurement conditions). This may vary depending on conditions such as subject and brightness during shooting.).

- When using a Mount Adaptor, the Auto Focus does not work in movie mode.
- When using a Mount Adaptor in movie mode, adjust the aperture manually.

Available focus area
When the LA-EA3 Mount Adaptor is mounted, the available focus areas are the same as for the available settings of this camera.

---

[280] How to Use | Precautions/This product | Other information

LA-EA4 Mount Adaptor

If you use the LA-EA4 Mount Adaptor (sold separately), the following functions are available.

Full size shooting:
Available with full size shooting-compatible lenses only
Autofocus:
Available
AF system:
Phase Detection AF, which is controlled by the dedicated AF sensor inside the Mount Adaptor
AF/MF Select:
Lenses that do not support Direct manual focus: Can be changed using the operating switch on the lens.
Lenses that support Direct manual focus: Can be changed using the operating switch on the lens. When the switch on the lens is set to AF, you can use MENU to change the focusing method.

Other lenses:
Can be changed using MENU.
Focus Mode:
Available modes are as follows
(Single-shot AF/Continuous AF)

Available focus area

Wide:

The product automatically selects a focus area from among 15 areas.

Center:

The product uses the focus area located in the center area exclusively.

Flexible Spot:

You can select a focus area from 15 areas using the control wheel.

---

[281] How to Use | Precautions/This product | Other information

Vertical grip

You can attach a vertical grip (sold separately) to this product and record vertically oriented images. When attaching the vertical grip, remove the battery cover in advance. For details, refer to the operating instructions for the vertical grip.

How to remove the battery cover

Press the attaching/removing lever of this product while pulling the battery cover aside.

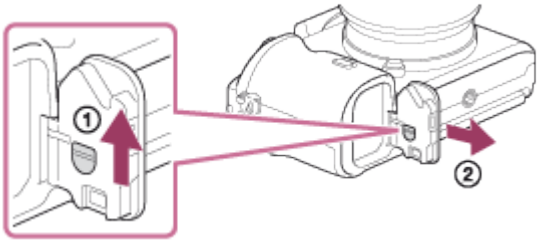

- You can attach the removed battery cover to the vertical grip so that you do not lose it.

How to attach the battery cover

Insert the shaft of the battery cover into the battery cover shaft opening, and slide the attaching/removing lever down to lock it.

Note

- When a vertical grip is attached to this product, the battery remaining is displayed as 1 2 .
- When the vertical grip is attached, you cannot perform the following operations:
  - Charging the battery pack (If you want to charge the battery pack, insert it into the camera, not into the vertical grip.)
  - Using the AC Adaptor AC-PW20 (sold separately)

License

Notes on the License

This product comes with software that are used based on licensing agreements with the owners of that software. Based on requests by the owners of copyright of these software applications, we have an obligation to inform you of the following. Please read the following sections. Licenses (in English) are recorded in the internal memory of your product. Establish a Mass Storage connection between the product and a computer to read licenses in the “PMHOME” - “LICENSE” folder.

THIS PRODUCT IS LICENSED UNDER THE AVC PATENT PORTFOLIO LICENSE FOR THE PERSONAL USE OF A CONSUMER OR OTHER USES IN WHICH IT DOES NOT RECEIVE REMUNERATION TO
(i) ENCODE VIDEO IN COMPLIANCE WITH THE AVC STANDARD (“AVC VIDEO”) AND/OR
(ii) DECODE AVC VIDEO THAT WAS ENCODED BY A CONSUMER ENGAGED IN A PERSONAL ACTIVITY AND/OR WAS OBTAINED FROM A VIDEO PROVIDER LICENSED TO PROVIDE AVC VIDEO.
NO LICENSE IS GRANTED OR SHALL BE IMPLIED FOR ANY OTHER USE. ADDITIONAL INFORMATION MAY BE OBTAINED FROM MPEG LA, L.L.C. SEE
HTTP://WWW.MPEGLA.COM

On GNU GPL/LGPL applied software

The software that is eligible for the following GNU General Public License (hereinafter referred to as “GPL”) or GNU Lesser General Public License (hereinafter referred to as “LGPL”) are included in the product.
This informs you that you have a right to have access to, modify, and redistribute source code for these software programs under the conditions of the supplied GPL/LGPL.
Source code is provided on the web.
Use the following URL to download it.
http://www.sony.net/Products/Linux/
We would prefer you do not contact us about the contents of source code.

Licenses (in English) are recorded in the internal memory of your product. Establish a Mass Storage connection between the product and a computer to read licenses in the “PMHOME” - “LICENSE” folder.

Trademarks

- The following marks are registered trademarks or trademarks of Sony Corporation.
  α, MEMORY STICK, Memory Stick, MEMORY STICK PRO, Memory Stick PRO, MEMORY STICK DUO, Memory Stick Duo, MEMORY STICK PRO DUO, Memory Stick PRO Duo, MEMORY STICK PRO-HG DUO, Memory Stick PRO-HG Duo, MEMORY STICK XC-HG DUO, Memory Stick XC-HG Duo, MEMORY STICK MICRO, Memory Stick Micro, MAGICGATE, MagicGate, PhotoTV HD, InfoLITHIUM, PlayMemories Online, PlayMemories Online logo, PlayMemories Home, PlayMemories Home logo, PlayMemories Mobile, PlayMemories Mobile logo

  PlayMemories Camera Apps, PlayMemories Camera Apps logo
  Multi Interface Shoe, Multi Interface Shoe logo
- XAVC S and XAVC S are registered trademarks of Sony Corporation.
- Blu-ray Disc™ and Blu-ray™ are trademarks of the Blu-ray Disc Association.
- AVCHD Progressive and AVCHD Progressive logotype are trademarks of Panasonic Corporation and Sony Corporation.
- Dolby and the double-D symbol are trademarks of Dolby Laboratories.
- HDMI, the HDMI logo and High-Definition Multimedia Interface are trademarks or registered trademarks of HDMI Licensing LLC.
- Microsoft, Windows, DirectX and Windows Vista are either registered trademarks or trademarks of Microsoft Corporation in the United States and/or other countries.
- Mac and Mac OS are trademarks of Apple Inc.

- iOS is a registered trademark or trademark of Cisco Systems Inc.
- iPhone and iPad are trademarks of Apple Inc., registered in the U.S. and other countries.

- SDXC logo is a trademark of SD-3C, LLC.

- Android and Google Play are trademarks or registered trademarks of Google Inc.
- Wi-Fi, the Wi-Fi logo, Wi-Fi PROTECTED SET-UP are registered trademarks or trademarks of the Wi-Fi Alliance.

- The N Mark is a trademark or registered trademark of NFC Forum, Inc. in the United States and in other countries.

- DLNA and DLNA CERTIFIED are trademarks of Digital Living Network Alliance.

- " " and "PlayStation" are registered trademarks of Sony Computer Entertainment Inc.

  Works with PlayStation3

- Add further enjoyment with your PlayStation 3 by downloading the application for PlayStation 3 from PlayStation Store (where available.)
- The application for PlayStation 3 requires PlayStation Network account and application download. Accessible in areas where the PlayStation Store is available.
- Eye-Fi is a trademark of Eye-Fi Inc.
- In addition, system and product names used in this manual are, in general, trademarks or registered trademarks of their respective developers or manufacturers. However, the ™ or ® marks may not be specified in all cases in this manual.

---

[284] Troubleshooting │ If you have problems │ If you have problems

Troubleshooting

If you experience trouble with the product, try the following solutions.

1. Check the items under “Troubleshooting”, then check the product.
2. Remove the battery pack, wait for about one minute, re-insert the battery pack, then turn on the power.
3. Initialize the settings.
4. Consult your dealer or local authorized service facility. Additional information on this product and answers to frequently asked questions can be found at our Customer Support Website.
   http://www.sony.net/

---

[285] Troubleshooting │ Troubleshooting │ Battery pack and power

You cannot insert the battery pack into the product.

- Make sure the direction of the battery pack is correct, and insert it until the battery lock lever is locked.

---

[286] Troubleshooting │ Troubleshooting │ Battery pack and power

You cannot turn on the product.

- After inserting the battery pack into the product, it may take a few moments for the product to power up.
- Make sure that the battery pack is inserted correctly.
- The battery pack will discharge by itself even if you do not use it. Charge the battery pack before use.
- Make sure that the battery is NP-FW50.

[287] Troubleshooting │ Troubleshooting │ Battery pack and power

The power turns off suddenly.

- Depending on the product and battery pack temperature, the product may turn off automatically to protect itself. In this case, a message is displayed on the product screen before the product turns off.

[288] Troubleshooting │ Troubleshooting │ Battery pack and power

The remaining battery level indicator shows an incorrect level.

- This phenomenon occurs when you use the product in an extremely hot or cold location.
- Battery capacity decreases over time and through repeated use. If decreased usage time between charges becomes significant, it is probably time to replace it with a new one.

[289] Troubleshooting │ Troubleshooting │ Battery pack and power

The charge lamp on the product/the CHARGE lamp of the battery charger flashes when charging the battery pack.

- Make sure that the battery is NP-FW50.

- Batteries which have not been used for more than a year may have deteriorated.
- This phenomenon occurs when you charge the battery pack in an extremely hot or cold location. The optimum temperature for charging the battery pack is between 10 °C and 30 °C (50 °F and 86 °F).

---

[290] Troubleshooting │ Troubleshooting │ Battery pack and power

The battery pack inserted in the camera is not charging.

- Charge the battery pack with the camera's power turned off.

---

[291] Troubleshooting │ Troubleshooting │ Battery pack and power

The battery pack is not charged.

- When the battery pack is not charged (the charge lamp does not light) even if you follow the proper charging procedure, check if the power of the product is turned off, then remove the battery pack and re-insert the same battery pack securely, or disconnect and reconnect the USB cable.

---

[292] Troubleshooting │ Troubleshooting │ Battery pack and power

The monitor does not turn on even when the product is turned on.

- [FINDER/MONITOR] is set to [Viewfinder]. Set [FINDER/MONITOR] to [Auto].

---

[293] Troubleshooting │ Troubleshooting │ Shooting still images/movies

You cannot record images.

- You are using a memory card with a write-protect switch, and the switch is set to the

LOCK position. Set the switch to the record position.
- Check the free capacity of the memory card.
- You cannot record images while charging the flash.
- The lens is not attached properly. Attach the lens properly.
- The [Self-timer] is activated.

---

[294] Troubleshooting | Troubleshooting | Shooting still images/movies

Recording takes a long time.

- The noise reduction function is processing an image. This is not a malfunction.
- You are shooting in RAW mode. Since RAW data files are large, RAW mode shooting may take time.
- The [Auto HDR] function is processing an image.
- The product is compiling images.

---

[295] Troubleshooting | Troubleshooting | Shooting still images/movies

The image is out of focus.

- The subject is too close. Check the minimum focal distance of the lens.
- Ambient light is insufficient.
- The subject you are shooting is not suitable for auto-focusing. Shoot in [Flexible Spot] mode or manual focus mode.

---

[296] Troubleshooting | Troubleshooting | Shooting still images/movies

The angle of view changes little by little while shooting images.

- Depending on the lens you use, the angle of view may change little by little while focusing. This change in angle of view may be more evident when the focus mode is set to [Continuous AF] (AF-C) (including [Sports Action] in the Scene Selection function). This does not affect the actual recorded images.
  Consult your Sony dealer or local authorized Sony service facility on compatible lenses.

[297] Troubleshooting | Troubleshooting | Shooting still images/movies

The recording date and time are not displayed on the screen.

- While shooting, the date and time are not displayed. They are displayed only during playback.

[298] Troubleshooting | Troubleshooting | Shooting still images/movies

The date and time are recorded incorrectly.

- Set the correct date and time.
- The area selected using [Area Setting] differs from the actual area. Select the actual area.

[299] Troubleshooting | Troubleshooting | Shooting still images/movies

The aperture value and/or shutter speed and/or metering indicator flashes.

- The subject is too bright or too dark to shoot using the current aperture value and/or shutter speed settings. Readjust the settings.

[300] Troubleshooting | Troubleshooting | Shooting still images/movies

The image colors are not correct.

- Adjust [White Balance].
- [Picture Effect] is set. Set [Picture Effect] to [Off].
- [Picture Profile] is set. Set [Picture Profile] to [Off].
- To reset settings to default, perform [Setting Reset].

[301] Troubleshooting │ Troubleshooting │ Shooting still images/movies

Noise appears in the image when you view the screen in a dark place.

- The product is attempting to increase the visibility of the screen by temporarily brightening the monitor under conditions of low illumination. There is no effect on the recorded image.

[302] Troubleshooting │ Troubleshooting │ Shooting still images/movies

The eyes of the subject come out red.

- Set [Red Eye Reduction] to [On].
- Shoot the subject at a distance closer than the flash range using the flash.
- Light the room and shoot the subject.

[303] Troubleshooting │ Troubleshooting │ Shooting still images/movies

Dots appear and remain on the screen.

- This is not a malfunction. These dots are not recorded.

[304] Troubleshooting │ Troubleshooting │ Shooting still images/movies

You cannot shoot images continuously.

- The memory card is full. Delete unnecessary images.
- The battery level is low. Insert a charged battery pack.

[305] Troubleshooting | Troubleshooting | Shooting still images/movies

The image is not clear in the viewfinder.

- Adjust the diopter scale properly using the diopter-adjustment dial.

[306] Troubleshooting | Troubleshooting | Shooting still images/movies

The image is whitish (Flare)./Blurring of light appears on the image (Ghosting).

- When pointing the lens toward the strong light source, excessive light enters the lens and the image may come out white (flare) or extraneous light (ghost images) may appear on the image, but this is not a malfunction.
  When using the zoom lens, attach the lens hood.
  Also, set up the composition so that you shoot images while avoiding backlit condition.

[307] Troubleshooting | Troubleshooting | Shooting still images/movies

The corners of the picture are too dark.

- If any filter or hood is used, take it off and try shooting again. Depending on the thickness of the filter and improper attachment of the hood, the filter or the hood may partially appear in the image. The optical properties of some lenses may cause the periphery of the image to appear too dark (insufficient light). You may compensate for this phenomenon with [Shading Comp.].
- When using an E-mount lens for APS-C size shooting, set [APS-C Size Capture] to [Auto] or [On], then shoot the images.

[308] Troubleshooting | Troubleshooting | Shooting still images/movies

The image is blurred.

- Make sure that [SteadyShot] is set to [On].
- The picture was taken in a dark location without the flash, resulting in camera-shake. The

use of a tripod or the flash is recommended. [Hand-held Twilight] and [Anti Motion Blur] in [Scene Selection] are also effective in reducing blur.

---

[309] Troubleshooting | Troubleshooting | Shooting still images/movies

The LCD screen darkens after a short period of time passed.

- If you do not operate the product for a certain period of time, the product switches to the power-save mode. The product exits power-save mode when you perform operations such as pressing the shutter button halfway.

---

[310] Troubleshooting | Troubleshooting | Shooting still images/movies

The control dial or control wheel does not work.

- [Dial / Wheel Lock] is on. Hold down the Fn button until the lock is released, or set the [Dial / Wheel Lock] to [Unlock].

---

[311] Troubleshooting | Troubleshooting | Viewing images

Images cannot be played back.

- Make sure that the memory card is fully inserted into the product.
- The folder/file name has been changed on your computer.
- When an image file has been processed by a computer or when the image file was recorded using a model other than this product, playback on this product is not guaranteed.
- The product is in USB mode. Disconnect the product from the computer.
- Use PlayMemories Home to play back on this product images that are stored on your computer.

---

[312] Troubleshooting | Troubleshooting | Viewing images

The date and time are not displayed.

- The screen display is set to display images only. Press DISP (Display Setting) on the control wheel to display the information.

[313] Troubleshooting | Troubleshooting | Viewing images

The image cannot be deleted.

- Cancel the protection.

[314] Troubleshooting | Troubleshooting | Viewing images

The image was deleted by mistake.

- Once you have deleted an image, you cannot restore it. We recommend that you protect images that you do not want to delete.

[315] Troubleshooting | Troubleshooting | Viewing images

A DPOF mark cannot be put.

- You cannot place DPOF marks on RAW images.

[316] Troubleshooting | Troubleshooting | Wi-Fi

You cannot find the wireless access point to be connected.

- Wireless access points may not be displayed on the product due to signal conditions.

Place the product closer to the wireless access point.
- Wireless access points may not be displayed on the product depending on the access point settings. Refer to the instruction manual of the wireless access point.

---

[317] Troubleshooting | Troubleshooting | Wi-Fi

[WPS Push] does not work.

- [WPS Push] may not work depending on the access point settings. Check the SSID and password of the wireless access point, and perform [Access Point Set.].

---

[318] Troubleshooting | Troubleshooting | Wi-Fi

[Send to Computer] is canceled halfway.

- When the battery remaining level is low, [Send to Computer] may be canceled halfway. Charge the battery pack and try again.

---

[319] Troubleshooting | Troubleshooting | Wi-Fi

You cannot send movies to a smartphone.

- You cannot send XAVC S movies to a smartphone.
- You cannot send AVCHD movies to a smartphone. Set [File Format] to [MP4] to record movies.

---

[320] Troubleshooting | Troubleshooting | Wi-Fi

[Smart Remote Embedded] or [Send to Smartphone] is canceled halfway.

- When the remaining battery level is low, [Smart Remote Embedded] or [Send to

Smartphone] may be canceled halfway. Charge the battery pack and try again.

---

[321] Troubleshooting | Troubleshooting | Wi-Fi

The shooting screen for [Smart Remote Embedded] is not displayed smoothly./The connection between this product and the smartphone is disconnected.

- Data communication between this product and the smartphone may fail due to signal conditions. Place this product closer to the smartphone.

---

[322] Troubleshooting | Troubleshooting | Wi-Fi

You cannot use One-Touch connection (NFC).

- Place the (N mark) on the smartphone and the (N mark) on the product as close together as possible. If there is no response, move the smartphone a few millimeters or move the smartphone away from this product, wait more than 10 seconds, and then touch them together again.
- [Airplane Mode] is set to [On]. Set [Airplane Mode] to [Off].
- Check whether the NFC function is activated on your smartphone. For details, refer to the instruction manual of the smartphone.
- Do not place any metal objects other than a smartphone near the (N mark).
- Do not contact two or more smartphones to this product at the same time.
- If another NFC-based application is running on your smartphone, terminate that application.

---

[323] Troubleshooting | Troubleshooting | Computers

The computer does not recognize this product.

- Set [USB Connection] to [Mass Storage].
- Use the micro USB cable (supplied) to connect the devices.
- Disconnect the USB cable, and connect it again firmly.

Disconnect all equipment other than this product, the keyboard and the mouse from the USB terminals of your computer.
- Connect this product directly to your computer without passing through a USB hub or other device.

---

[324] Troubleshooting │ Troubleshooting │ Computers

You cannot import images.

- Connect this product and your computer correctly making a USB connection.
- When you shoot images with a memory card formatted by a computer, you may not be able to import the images to a computer. Shoot using a memory card formatted by this product.

---

[325] Troubleshooting │ Troubleshooting │ Computers

The image and sound are interrupted by noise when viewing a movie on a computer.

- You are playing back the movie directly from the memory card. Import the movie to your computer using PlayMemories Home and play it back.

---

[326] Troubleshooting │ Troubleshooting │ Computers

Images exported from a computer cannot be viewed on this product.

- Use PlayMemories Home to copy images that are stored on a computer onto a memory card inserted into this product and view them on this product.

---

[327] Troubleshooting │ Troubleshooting │ Memory cards

Formatted the memory card by mistake.

- All the data on the memory card is deleted by formatting. You cannot restore the data.

[328] Troubleshooting | Troubleshooting | Printing

You cannot print images.

- RAW images cannot be printed. To print RAW images, first convert them to JPEG images using “Image Data Converter.”

[329] Troubleshooting | Troubleshooting | Printing

The color of the image is strange.

- When you print the images recorded in Adobe RGB mode using sRGB printers that are not compatible with Adobe RGB (DCF2.0/Exif2.21), the images are printed at a lower saturation.

[330] Troubleshooting | Troubleshooting | Printing

Images are printed with both edges cut off.

- Depending on your printer, the left, right, top, and bottom edges of the image may be cut off. Especially when you print an image shot with [Aspect Ratio] set to [16:9], the lateral end of the image may be cut off.
- When printing images using your printer, cancel the trimming or borderless settings of the printer. Consult the printer manufacturer as to whether the printer provides these functions or not.
- When you print images at a shop, ask the shop whether they can print the images without cutting off both edges.

[331] Troubleshooting | Troubleshooting | Printing

You cannot print images with the date.

- If you want to print images with the date, use[Print Setting] under [Specify Printing].
- You can print images with the date superimposed if the printer or the software can recognize Exif information. For compatibility with Exif information, consult the manufacturer of the printer or the software.
- Using PlayMemories Home, you can print images with the date without recording the date.
- When you print images at a shop, images can be printed with the date if you ask them to do so.

[332] Troubleshooting | Troubleshooting | Others

The lens gets fogged.

- Moisture condensation has occurred. Turn off the product and leave it for about an hour before using it.

[333] Troubleshooting | Troubleshooting | Others

The product becomes warm when you use it for a long time.

- This is not a malfunction. Turn off the product and do not use it for a while.

[334] Troubleshooting | Troubleshooting | Others

The Clock Set screen appears when you turn on the product.

- Set the date and time again.
- The internal rechargeable backup battery has discharged. Insert a charged battery, and set aside for 24 hours or more with the power left off.

[335] Troubleshooting | Troubleshooting | Others

The number of recordable images does not decrease, or decreases two images at a time.

- This is because the compression rate and the image size after compression change depending on the image when you shoot a JPEG image.

[336] Troubleshooting | Troubleshooting | Others

The product does not work properly.

- Turn off the product. Remove the battery pack and insert it again. If the product is hot, remove the battery pack, and allow it to cool down before trying this corrective procedure.
- If an AC-PW20 AC Adaptor (sold separately) is used, disconnect the power cord. Connect the power cord and turn on the product again. If the product repeats the same error often or still does not work after trying these solutions, consult your Sony dealer or local authorized Sony service facility.

[337] Troubleshooting | Troubleshooting | Others

“--E-” appears on the screen.

- Remove the memory card, and insert it again. If the problem persists even after performing this procedure, format the memory card.

[338] Troubleshooting | Messages | Messages

Warning messages

Set Area/Date/Time.

- Set the area, date and time. If you have not used the product for a long time, charge the

internal rechargeable backup battery.

Power insufficient.

- The cleaning mode will not operate when the remaining battery charge is less than (3). We recommend using the AC Adaptor AC-PW20 when using cleaning mode.

Unable to use memory card. Format?

- The memory card was formatted on a computer and the file format was modified. Select [Enter], and then format the memory card. You can use the memory card again, however, all previous data in the memory card is erased. It may take some time to complete the format. If the message still appears, change the memory card.

Memory Card Error

- An incompatible memory card is inserted.
- Formatting has failed. Format the memory card again.

Unable to read memory card. Reinsert memory card.

- An incompatible memory card is inserted.
- The memory card is damaged.
- The terminal section of the memory card is dirty.

This memory card may not be capable of recording and playing normally.

- An incompatible memory card is inserted.

Processing...

- When performing noise reduction, the reduction process takes place. You cannot do any further shooting during this reduction process.

Unable to display.

- Images recorded with other products or images modified with a computer may not be displayed.

Cannot recognize lens. Attach it properly.

- The lens is not attached properly, or the lens is not attached. If the message appears when a lens is attached, reattach the lens. If the message appears frequently, check whether the contacts of the lens and product are clean or not.
- When attaching the product to an astronomical telescope or something similar, set [Release w/o Lens] to [Enable].
- The SteadyShot function does not work. You can continue to shoot but the SteadyShot function will not work. Turn the product off and on again. If this icon does not disappear, consult your Sony dealer or local authorized Sony service facility.
- The retractable lens with power zoom is retracted. Turn off the product and eject the battery pack, then reinsert the battery pack.

Unable to print.

- You tried to mark RAW images with a DPOF mark.

Internal temp. high. Allow it to cool.

- The product has become hot because you have been shooting continuously. Turn the power off. Cool the product and wait until the product is ready to shoot again.

[!]

- You have been recording images for a long time, the product temperature has risen. Stop recording images until the product cools.

Recording is unavailable in this movie format.

- Set [File Format] to [MP4].

FULL

- The number of images exceeds that for which date management in a database file by the product is possible.

ERROR

- Unable to register to the database file. Import all the images to a computer and recover the memory card.

Image DataBase File error

- There is something wrong in the Image Database File. Select[Setup] → [Recover Image DB].

System Error
Camera Error. Turn power off then on.

- Remove the battery pack, and then re-insert it. If the message appears frequently, consult your Sony dealer or local authorized Sony service facility.

Unable to magnify.
Unable to rotate image.

- Images recorded with other products may not be enlarged or rotated.

Situations this product has difficulty handling

The product cannot take full advantage of some features under certain circumstances. When shooting under the following conditions, either recompose the shot or change the shooting mode, then shoot the images again.

Low light conditions

- Sweep Panorama
- Lock-on AF

Overly bright conditions

- Lock-on AF

Varying levels of brightness

- Lock-on AF

Flickering lights

- Sweep Panorama

Subjects too close to the product

- Sweep Panorama

Large moving subjects or subjects that move too quickly

- Superior Auto
- Sweep Panorama
- Auto HDR
- Lock-on AF

Subjects too small or too large

- Sweep Panorama
- Lock-on AF

Scenes with little contrast, such as the sky or a sandy beach

- Sweep Panorama
- Superior Auto

Scenes changing constantly, such as a waterfall

- Sweep Panorama
- Superior Auto